ABRASIVE ARTICLES AND METHODS FOR MAKING AND USING SAME

Alessandro Milani
Robert Wilting
Frank Csillag

FIELD OF THE DISCLOSURE

[0001] The present invention relates in general to abrasive articles and, in particular, to abrasive wheels and methods of making and using such wheels.

BACKGROUND

[0002] Abrasive wheels are typically used for cutting, abrading, and shaping of various materials, such as stone, metal, glass, and plastics, among other materials. Generally, the abrasive wheels can have various phases of materials including abrasive grains or particles, a bonding agent, and some porosity. Depending upon the intended application, the abrasive wheel can have various designs and configurations. For example, for applications directed to the finishing and cutting of metals, some abrasive wheels are fashioned such that they have a particularly thin profile for efficient cutting.

[0003] However, given the application of such wheels, the abrasive articles are subject to fatigue and failure. In the case of thin wheel cutting systems, degradation includes a reduction in the amount of cutting that can be achieved before the thin wheeled abrasive wears out. In addition, degradation can include an increase in wear rate of the abrasive article or a reduction in grind rate on a work piece. In fact, the wheels may have a limited time of use of less than a day depending upon the frequency of use. Accordingly, the industry continues to demand abrasive wheels capable of improved performance.

SUMMARY

[0004] In an embodiment, an abrasive article includes a thin wheel tool having a body that includes a blend of abrasive particles contained in a bond material. The blend of

abrasive particles includes a first type of abrasive particle, such as a shaped abrasive particle, and a second type of abrasive particle different from the first type of abrasive particle and including at least one of zirconium, iron, silicon, titanium.

[0005] In another embodiment, a method of making an abrasive article includes making a mixture of a precursor bond material and a blend of abrasive particles, where the blend of abrasive particles includes a first type of abrasive particle, such as a shaped abrasive particle, and a second type of abrasive particle different from the first type of abrasive particle, wherein the second type of abrasive particle includes at least one of zirconium, iron, silicon, titanium, and forming a thin wheel tool having a body including the blend of abrasive particles contained in the bond material**,** wherein forming includes curing a green body at a cure temperature of at least 150ºC for at least 22 hours to form the body.

BRIEF DESCRIPTION OF THE DRAWINGS

[0006] Embodiments are illustrated by way of example and are not limited in the accompanying figures.

[0007] FIG. 1A is a cross-section view of a wheel illustrated in accordance with an embodiment described herein.

[0008] FIG. 1B is a view of a patterned working (front) face of a wheel illustrated in accordance with an embodiment described herein.

[0009] FIG. 1C is a view of a working (front) face of a wheel illustrated in accordance with an embodiment described herein.

[0010] FIG. 1D is a view of a workpiece being processed by a wheel illustrated in accordance with an embodiment described herein.

[0011] FIGS. 2A through 2E are cross-sectional views of a portion of the flat region of a wheel illustrating various arrangements of abrasive layers and reinforcements in accordance with an embodiment described herein.

[0012] FIG. 3A includes a perspective view illustration of an abrasive particle in accordance with an embodiment described herein.

[0013] FIG. 3B includes a cross-sectional illustration of the abrasive particle of FIG. 3A in accordance with an embodiment herein.

[0014] FIG. 4 includes a cross-sectional illustration of an abrasive particle in accordance with an embodiment herein.

[0015] Skilled artisans appreciate that elements in the figures are illustrated for simplicity and clarity and have not necessarily been drawn to scale. For example, the dimensions of some of the elements in the figures may be exaggerated relative to other elements to help to improve understanding of embodiments of the invention.

DETAILED DESCRIPTION

[0016] The following description in combination with the figures is provided to assist in understanding the teachings disclosed herein. The following discussion will focus on specific implementations and embodiments of the teachings. This focus is provided to assist in describing the teachings and should not be interpreted as a limitation on the scope or applicability of the teachings. However, other teachings can certainly be used in this application.

[0017] As used herein, the terms "comprises," "comprising," "includes," "including," "has," "having" or any other variation thereof, are intended to cover a non-exclusive inclusion. For example, a method, article, or apparatus that comprises a list of features is not necessarily limited only to those features but may include other features not expressly listed or inherent to such method, article, or apparatus. Further, unless expressly stated to the contrary, "or" refers to an inclusive-or and not to an exclusive-or. For example, a condition A or B is satisfied by any one of the following: A is true (or present) and B is false (or not present), A is false (or not present) and B is true (or present), and both A and B are true (or present).

[0018] Also, the use of "a" or "an" is employed to describe elements and components described herein. This is done merely for convenience and to give a general sense of the scope of the invention. This description should be read to include one or at least one and the singular also includes the plural, or vice versa, unless it is clear that it is meant otherwise. For example, when a single item is described herein, more than one item may be used in place of a single item. Similarly, where more than one item is described herein, a single item may be substituted for that more than one item.

[0019] Unless otherwise defined, all technical and scientific terms used herein have the same meaning as commonly understood by one of ordinary skill in the art to which this invention belongs. The materials, methods, and examples are illustrative only and not intended to be limiting. To the extent not described herein, many details regarding specific materials and processing acts are conventional and may be found in reference books and other sources within the structural arts and corresponding manufacturing arts.

[0020] The invention generally relates to bonded abrasive articles and in particular to bonded grinding/cutting wheels with improved material removal rates (MRR) and improved life span or length of use.

[0021] In one aspect, the invention is directed to an abrasive article. The abrasive article includes a thin wheel tool having a body including a blend of abrasive particles contained in a bond material. The blend of abrasive particles includes a first type of abrasive particle, such as a shaped abrasive particle, and a second type of abrasive particle different from the first type of abrasive particle, wherein the second type of abrasive particle includes at least one of zirconium, iron, silicon, titanium.

[0022] In another aspect, the invention is directed to a method of making an abrasive article in which a mixture is made of a precursor bond material and a blend of abrasive particles, where the blend of abrasive particles includes a first type of abrasive particle, such as a shaped abrasive particle, and a second type of abrasive particle different from the first type of abrasive particle, wherein the second type of abrasive particle includes at least one of zirconium, iron, silicon, titanium. A thin wheel tool is then formed having a body including the blend of abrasive particles contained in the bond material, where

forming includes curing a green body at a cure temperature of at least 150ºC for at least 22 hours to form the body.

[0023] Further aspects of the invention relate to a method for using thin wheels such as those described herein. In one embodiment, a method for grinding a workpiece includes attaching a thin wheel tool as described herein to a grinding machine and rotating said thin wheel tool against a workpiece to grind said workpiece, where the thin wheel tool exhibits an increase in MRR with respect to a conventional wheel under the same grinding conditions. In another embodiment, a method for grinding a workpiece includes attaching a thin wheel tool as described herein to a grinding machine and rotating said thin wheel tool against a workpiece to grind said workpiece, where the thin wheel tool exhibits an increase in life span with respect to a conventional wheel under the same grinding conditions. Without wishing to be tied to any particular theories, it is thought that at least the combination of the blend of abrasive particles within the body and the process by which the abrasive article is made facilitates the formation of abrasive articles, namely thin wheels with or without reinforcement, that have improved performance, and notable, improved MRR and improved life span over conventional abrasive articles.

[0024] In particular instances, it has been noted that certain embodiments herein have demonstrated an improvement in life of at least about 1.2 times as compared to conventional thin wheel abrasive articles incorporating shaped abrasive particles according to a material removal test. In other instances, the embodiments herein have demonstrated an improvement in the useable life of the abrasive article of at least about 1.3 times, such as at least about 1.4 times, at least about 1.5 times, at least about 1.6 times, at least about 1.7 times, at least about 1.8 times, at least about 1.9 times, at least about 2 times a conventional sample including shaped abrasive particles. Still, in one embodiment, the embodiments have an improvement in the useable life of not greater than about 10 times compared to a conventional sample including shaped abrasive particles.

[0025] The corresponding conventional (or comparative) product can be an abrasive article of the same specification as the wheel according to aspects of the invention. Wheel

specifications are known in the art and are used to identify features such as wheel type, wheel composition, e.g., grain type, grit size, bond used, structure of the wheel, wheel hardness and so forth. Abrasive wheels also can be identified by their dimensions, manufacturer and/or other attributes, e.g., the presence or absence of reinforcement. In some implementations, the conventional wheel can be thought of as a wheel having a MRR and life span ordinarily associated with it, rather than the improved MRR and improved life span of a wheel of the invention.

Thin Wheels

[0026] In specific implementations, the abrasive articles include any suitable abrasive wheels. In an embodiment, the abrasive wheels include depressed center wheels, such as, for example, ANSI (American National Standards Institute) Type 27, Type 28 or Type 29 wheels, or European Standard (EN 14312) Type 42 wheels. Still, essentially any thin wheel construction may be utilized with the present embodiments.

[0027] Shown in FIG. 1A, for instance, is a cross-sectional view of depressed center abrasive wheel 10 which includes a rear (top) face 12 and a front (bottom) face 14. The rear face 12 can include a raised hub region 16 and outer flat rear wheel region 18. The front face 14 can include a depressed center region 20 and outer flat front wheel region 22 (which provides the working surface of the wheel). In turn, raised hub region 16 has raised hub surface 24 and back sloping (or slanted) surface 26; depressed center region 20 includes depressed center 28 and front sloping (or slanted) surface 30. Wheel 10 has central opening 32 for mounting the wheel on the rotating spindle of a tool, e.g., a hand-held angle grinder. During operation, wheel 10 typically is secured by mounting hardware (not shown in FIG. 1A) such as, for instance, a suitable flange system. The wheel can also be part of an integrated arrangement that includes mounting hardware.

[0028] Wheel 10 can have a thickness “A” that can be measured at various position, including at the periphery of the wheel. In many designs, the thickness of wheel 10 remains the same or essentially the same along a radial direction from the central opening to the outer edge (periphery) of the wheel. In other designs, the wheel thickness can vary (can increase or decrease) along a radial distance from the central opening to its

periphery. For example, the body of wheel 10 can have a thickness A in a range of 0.8 mm to 20 mm, such as a range of 0.8 mm to 15 mm, or even a range of 0.8 mm to 10 mm. In particular, the body of wheel 10 can include a thickness A of at least about 0.8 mm, such as, at least about 0.9 mm, at least about 1 mm, at least about 1.2 mm, at least about 1.3 mm, at least about 1.5 mm, at least about 1.8 mm, at least about 2 mm, at least about 2.2mm, at least about 2.5 mm, at least about 2.8 mm, at least about 3 mm, at least about 3.2 mm, at least about 3.5 mm, at least about 3.8 mm, at least about 4 mm, at least about 4.2 mm, at least about 4.5 mm, at least about 4.8 mm, or at least about 5 mm.

[0029] In at least one embodiment, the thickness A of wheel 10 (e.g., a "thin" wheel or hand-held wheel) can be less than about 10 mm, such as not greater than about 9.0 mm such as, for example, not greater than about 8 mm, not greater than about 7 mm, not greater than about 6 mm, not greater than about 5.8 mm, not greater than about 5.5 mm, not greater than about 5.2 mm, not greater than about 5 mm, not greater than about 4.8 mm, not greater than about 4.5 mm, not greater than about 4.2 mm, not greater than about 4 mm, not greater than about 3.8 mm, not greater than about 3.5 mm, not greater than about 3.2 mm, not greater than about 3 mm, not greater than about 2.8 mm, not greater than about 2.5 mm, not greater than about 2.2 mm, not greater than about 2 mm. Wheel 10 can include a thickness "A" within a range between any of these minimum and maximum values.

[0030] Various embodiments of the thin wheel abrasive article may utilize a patterned working surface, wherein the working surface is a surface of the abrasive article intended to contact the workpiece and conduct the material removal operation. Shown in FIG. 1B, for instance, is a front view of a wheel 150, having mounting hole 155, center region 151, and working surface 153, which can be patterned to have an array of protrusions 157 that are separated by recesses (or channels) 159. It will be appreciated that any arrangement, distribution, or pattern may be utilized with any of the embodiments herein.

[0031] In an alternative embodiment, the thin wheel abrasive article can have a working surface that is essentially free of of patterned features. FIG. 1C, for instance, shows a front view of wheel 100, having center region 101, a mounting hole 105, and working

surface 103, which is substantially smooth (i.e., not patterned). In other words, the working surface 103 does not have protrusions or channels (recesses).

[0032] Further, the thin-wheel abrasive articles of the embodiments herein can have a body including an outer diameter 111 in a range of 50 mm to 400 mm, such as an outer diameter 111 in a range of between about 50 mm and 230 mm, such as 75 mm to 230 mm, or even a range of 75 mm to 150 mm.

[0033] Aspect ratios between wheel diameter and wheel thickness (diameter:thickness) can be at least about 15:1, at least about 20:1, at least about 25:1, at least about 35:1, at least about 50:1, at least about 75:1, at least about 100:1, or at least about 125:1. In other instances, the body of the thin wheel abrasive article can have an aspect ratio of diameter:thickness of not greater than about 125:1, not greater than about 100:1, not greater than about 75:1, not greater than about 50:1, not greater than about 35:1, not greater than about 25:1, not greater than about 20:1, or not greater than about 15:1. The ratio can be within a range between any of the above minimum and maximum values, such as within a range of about 125:1 to about 15:1, e.g., between about 100:1 to about 30:1. However, the invention can be practiced with wheels having different dimensions and different ratios between dimensions. For example, the thin-wheel abrasive article also can have a desirable aspect ratio in a range of 5 to 160, such as a range of 15 to 160, a range of 15 to 150, or even a range of 20 to 125.

[0034] The thin wheel abrasive articles of the embodiments herein can be rigid or flexible. For example, some thin wheel abrasive articles may have a reduced stiffness, and thus are referred to as pliable or compliant. Compliance of the wheel can be described by its ability to deflect, and wheels are capable of limited deflection without breaking. As an illustration, shown in FIG. 1D is a pliable thin wheel abrasive article 100 being rotated, as indicated by the arrow, against surface 122 of workpiece 120. As outer portion 103 of wheel 100 contacts and grinds the workpiece, it can be deflected out of plane with the rest of the body of the wheel, thus enhancing contact with the workpiece being processed.

[0035] The thin wheel abrasive articles of the embodiments herein can have certain constructions. It will be appreciated that the thin wheel abrasive articles of the embodiments herein may be monolithic articles formed of a single layer having a single construction, having a substantially uniform grade and structure throughout the volume of the body of the abrasive article. Alternatively, the thin wheel abrasive articles of the embodiments herein can be composite bodies having one or more layers, wherein at least two of the layers are different from each other based on a characteristic such as, abrasive particle type, content of abrasive particles, porosity type (e.g., closed or open), content of porosity, type of bond material, content of bond material, distribution of abrasive particles, hardness, flexibility, filler content, filler materials, shape of the layer, size (e.g., thickness, width, diameter, circumference, or length) of the layer, construction of the layer (e.g., solid, woven, non-woven, etc.) and a combination thereof.

[0036] According to one embodiment, a thin wheel abrasive article can be reinforced with one or more, (e.g., two or three) reinforcements, which may be in the form of layers, partial layers, discrete bundles of material distributed throughout the bond material, and a combination thereof. As used herein, terms such as "reinforced" or "reinforcement" refer to a discrete component that can be made of a material that is different from the bond material and blend of abrasive particles utilized to make the abrasive wheel. Typically, the reinforcement material does not include abrasive particles. With respect to the thickness of the wheel, a reinforcement can be embedded within the wheel body and such wheels typically are referred to as "internally" reinforced. A reinforcement also can be close to, or attached to the front and/or back face of the wheel. Several reinforcements can be disposed at various depths through the wheel thickness.

[0037] Certain reinforcements may have a circular geometry. The outer periphery of the reinforcement also can have a square, hexagon or another polygonal geometry. An irregular outer edge also can be used. Suitable non-circular reinforcement shapes that can be utilized are described in U.S. Patent Nos. 6,749,496 and 6,942,561, incorporated herein by reference in their entirety. In many cases, a reinforcement extends from the inner diameter (edge of the central opening) to the outermost edge of the wheel. Partial reinforcements also can be employed and in such cases, the reinforcement may extend,

for example, from the inner wheel diameter (outer diameter of the central opening) to about 30%, 60 % , 70 %, 75 %, 80 %, 85 %, 90 % 95%, 99% along the wheel radius or, for non-circular shapes, along the equivalent of the largest "radius" of the reinforcement.

[0038] Various reinforcement materials can be used to reinforce the wheel and more than one type of reinforcement material can be employed in a single wheel. Suitable reinforcements can be woven or non-woven, utilizing materials such as glass (C, E, or S2), Kevlar, Basalt, carbon, fabric organic materials (e.g., elastomers, rubbers), combinations of materials and so forth. For example, a reinforcement layer can be made of any number of various materials. An exemplary reinforcement layer includes a polymeric film (including primed films), such as a polyolefin film (e.g., polypropylene including biaxially oriented polypropylene), a polyester film (e.g., polyethylene terephthalate), or a polyamide film; a cellulose ester film; a metal foil; a mesh; a foam (e.g., natural sponge material or polyurethane foam); a cloth (e.g., cloth made from fibers or yams comprising fiberglass, polyester, nylon, silk, cotton, poly-cotton or rayon); a paper; a vulcanized paper; a vulcanized rubber; a vulcanized fiber; a nonwoven material; or any combination thereof, or treated versions thereof. A cloth backing can be woven or stitch bonded. In particular examples, the reinforcement layer is selected from a group consisting of paper, polymer film, cloth, cotton, poly-cotton, rayon, polyester, poly-nylon, vulcanized rubber, vulcanized fiber, fiberglass fabric, metal foil or any combination thereof. In other examples, the reinforcement layer includes a woven fiberglass fabric. In a particular example, the abrasive article includes one more layers of fiberglass between which a blend abrasive grains or particles are bound in a bond material such as a polymer matrix. Using reinforcements also can allow for shear at the interface between the reinforcement and adjacent region(s) of the wheel (which contain abrasive grains or particles distributed in a three dimensional bond material matrix).

[0039] In specific examples, the wheel has at least one or more fiberglass reinforcements, provided, for instance, in the form of fiberglass web(s). Typically, fiberglass webs are woven from very fine fibers of glass. Fiberglass web can be leno or plain woven. The fiberglass utilized can be E-glass (alumino-borosilicate glass with less than 1 wt % alkali oxides). Other types of fiberglass include, for example, A-glass (alkali-lime glass with

little or no boron oxide), E-CR-glass (alumino-lime silicate with less than 1 wt % alkali oxides, with high acid resistance), C-glass (alkali-lime glass with high boron oxide content, used for example for glass staple fibers), D-glass (borosilicate glass with high dielectric constant), R-glass (alumino silicate glass without MgO and CaO with high mechanical requirements), and S-glass (alumino silicate glass without CaO but with high MgO content with high tensile strength).

[0040] Fiberglass webs can be arranged in a bonded abrasive tool such as a thin wheel tool in any suitable manner. In certain implementations, placement of a glass fiber web at the working face of the wheel may be avoided. Any of the embodiments herein can be reinforced with at least one fiberglass web having the similar inner diameter (corresponding to the diameter of the mounting hole) and the same outer diameter as the wheel. Partial web reinforcements that extend from the mounting hole through some but not all of the flat region of the wheel also can be used, as can be other web reinforcement placements.

[0041] Reinforcements can be characterized by one or more of the following physical parameters: weight (g/ m^2), thickness (mm), openings per cm and tensile strength (MPa), which can be further delineated with respect to the tensile strength of the warp (the long web components that run continuously for the length of the roll) and the tensile strength of the fill (the short components that run crosswise to the roll direction). In certain instances, one or more of the fiberglass webs employed has a minimum tensile strength of at least 200 MPa. Other factors include filament diameter, amount of coating, for instance, the coverage of the web with coating and others, as known in the art.

[0042] Chemical parameters can relate to the chemistry of the coating provided on the fiberglass web. Generally, there are two types of chemical "coatings." A first coating, often referred to as "sizing," is applied to the glass fiber strands immediately after they exit the bushing and includes ingredients such as film formers, lubricants, silanes, typically dispersed in water. The sizing typically provides protection of the filaments from processing-related degradation (such as abrasion). It can also provide abrasion protection during secondary processing such as weaving into a web. Strategic

manipulation of properties associated with the first coating (sizing) can affect the compatibility of the glass fibers with the second coating, which, in turn, can affect compatibility of the coating with the resin bond. Typically, the second coating can be applied to the glass web and traditionally includes wax, used primarily to prevent “blocking” of the webs during shipping and storage. In many cases, the second coating can be compatible with both the sizing (first coating) and the matrix resin for which the reinforcement is intended.

[0043] Bonded abrasive tools such as thin wheel tools with or without reinforcement can be prepared by combining one or more types of abrasive grains or particles, a bond material, e.g., an organic material (resin) or an inorganic material, and in many cases other ingredients, such as, for instance, fillers, processing aids, lubricants, crosslinking agents, antistatic agents and so forth.

[0044] The various ingredients can be added in any suitable order and blended using known techniques and equipment such as, for instance, Eirich mixers, e.g., Model RV02, Littleford, bowl-type mixers and others. The resulting mixture can be used to form a green body. As used herein, the term "green" refers to a body which maintains its shape during the next process step, but generally does not have enough strength to maintain its shape permanently. For example, a resin bond present in the green body is in an uncured or unpolymerized state. The green body preferably is molded in the shape of the desired article, e.g., a thin wheel (cold, warm or hot molding).

[0045] One or more reinforcements can be incorporated in the green body. For example, a first portion of a mixture containing one or more types of abrasive grains or particles and a bond material can be placed and distributed at the bottom of an appropriate mold cavity and then covered with a first reinforcement. A suitable reinforcement is a fiberglass mesh or web such as described herein. A second portion of the bond/abrasive mixture can then be disposed and distributed over the first reinforcement layer. Additional reinforcement and/or bond/abrasive mixture layers can be provided, if so desired. The amounts of mix added to form a particular layer thickness can be calculated as known in the art. Other suitable sequences and/or techniques can be employed to shape

the reinforced green body. For instance, a piece of paper or a fiberglass mesh or web or a piece of paper with a fiber glass mesh or web may be inserted in the mold cavity before the first mixture.

[0046] In some arrangements the various layers containing one or more types of abrasive grains or particles and bond material (also referred herein as "abrasive layers") can differ from one another with respect to one or more characteristics such as, for instance, layer thickness, layer formulation (e.g., amounts and or types of ingredients being employed, grit size, grit shape, porosity) and the like.

[0047] To form such an abrasive article, such as a thin wheel, a first abrasive layer, a_1 (containing abrasive particles and bond material), is laid at the bottom of the mold. A first reinforcement V_1 is disposed on the first abrasive layer a1, followed by a second abrasive layer, a_2, which can be the same or different from the first abrasive layer, a_1. A second reinforcement, V_2 (which can be the same or different from V_1), can be disposed over the second abrasive layer, a_2. If desired, a third abrasive layer, a3, that includes abrasive particles and bond material can be used to cover the second reinforcement, V_2. The third abrasive layer can be the same or different with respect to one or more of the abrasive layers a_1 and/or a_2. Additional reinforcements and abrasive layers can be added, essentially as described, to obtain the desired number of abrasive layers and reinforcements. In another approach, a first reinforcement V_1 is placed at the very bottom of the mold and covered by a first abrasive layer a_1, with additional abrasive layers and reinforcements being disposed as described above. Arrangements in which adjacent abrasive layers a_X and a_Y are not separated by reinforcement also are possible, as are those in which two or more reinforcement layers, e.g., V_x and V_y, are not separated by an abrasive abrasive layer.

[0048] To illustrate, FIG. 2A is a cross-section of a portion of flat outer region 200 of a depressed center wheel having abrasive layers 202 and 204 and no reinforcement between them. The individual thicknesses of abrasive layers 202 and 204 can be substantially the same or can be different. For example, the difference in thickness between the abrasive layers can be at least about 5% different, at least about 10%

different, at least about 20% different, at least about 25% different, at least about 30% different, or even at least about 50% different. FIG. 2B is a cross section of flat outer region 210 that includes one layer of reinforcements 212 and one abrasive layer 202. FIG. 2C is a cross section of flat outer region 220, which includes middle reinforcement 212 sandwiched between abrasive abrasive layers 202 and 204. FIG. 2D is a cross section of a portion of flat outer region 230 of a depressed center wheel having an alternating arrangement that includes reinforcement 212, abrasive abrasive layer 202, reinforcement 214 (which can be the same or different from reinforcement 212) and abrasive abrasive layer 204. FIG. 2E is a cross section of a portion of flat outer region 240 having an alternating arrangement which includes abrasive abrasive layer 202, reinforcement 212, abrasive abrasive layer 204 and reinforcement 214 at the working surface of the wheel. In many cases, the thickness of the reinforcement is less than that of any of the abrasive abrasive layers.

[0049] The individual thicknesses of the abrasive layers can be substantially the same. In certain instances, the thicknesses of the abrasive abrasive layers can be different, even significantly different. For example, the difference in thickness between two abrasive layers can be at least about 5% different, at least about 10% different, at least about 20% different, at least about 25% different, at least about 30% different, or even at least about 50% different. Engineered differences in the thicknesses between two abrasive layers can promote certain mechanical properties and advantages in grinding performance. In addition or alternatively to thickness variations, abrasive layers and/or reinforcements may differ with respect to formulation, materials employed and/or other properties.

Particular Aspects of Different Abrasive Layers

[0050] As noted above with respect to FIGs. 2A-2E, the thin wheel abrasive article can include various constructions including one or more different reinforcement layers, and various arrangements of the reinforcement layers with respect to the order and arrangement of the abrasive layers. As also noted generally herein, the thin wheel abrasive articles of the embodiments herein can include different abrasive layers with respect to each other. In one particular embodiment, the thin wheel abrasive article can

include a fine back layer that is configured to provide support to the abrasive article and a grinding layer, which can define a working surface of the thin wheel abrasive article configured to conduct a majority of the material removal operations as compared to the fine back layer. Abrasive articles according to embodiments herein, which include a fine back layer and a grinding layer, with or without interspersed reinforcements, can be both suitable to produce on a commercial scale and equal to or better in performance than a conventional abrasive article that includes one or more grinding layers without a fine back layer.

[0051] In at least one embodiment, the fine back layer may include abrasive particles having an average particle size that is less than an average particle size of one or more abrasive particles in the grinding layer. The grinding layer may include a blend of abrasive particles, including a first type of abrasive particle and a second type of abrasive particle, and the average particle size may be based on the individual particle size of any individual type or may be based on the average particle size of all combination of types of abrasive particles. For example, the difference in the average particle size between the fine back layer and the grinding layer can be at least about 2%, such as at least about 5%, at least about 10%, at least about 15%, at least about 20%, at least about 30%, at least about 50%, or even at least about 70%, based on the equation [(PSg-PSf)/PSg]x100%, wherein PSg is the average particle size of one or more abrasive particles of the grinding layer and PSf represents the average particle size of the abrasive particles of the fine back layer.

[0052] Moreover, the fine back layer may include abrasive particles that are different than one or more abrasive particle types of the grinding layer based on at least one abrasive characteristic selected from the group of average grain size, composition, content of alumina, content of silica, content of oxide-based compounds, hardness, friability, shape, density, content of binder (e.g., in the case of an agglomerated particle), and a combination thereof.

[0053] The fine back layer and grinding layer may be further differentiated from each other on the basis of grade and/or structure of the abrasive material. For example, one or

more of the content of abrasive particles, bond material, and/or porosity may be different between the fine back layer and grinding layer. The difference in any one of the content of abrasive particles, bond material, and porosity can be at least about 2%, such as at least about 3%, at least about 5%, at least about 8%, at least about 10%, at least about 12%, at least about 15%, or even at least about 18%. In certain instances, the fine back layer can have a greater content of bond material and a lesser content of abrasive particles as compared to the grinding layer.

[0054] Any of the abrasive layers of the embodiments herein may include one or more fillers. In particular instances, the content and type of fillers between two or more abrasive layers may be different with respect to each other. Certain suitable fillers can include active and/or inactive fillers in the form of a finely divided powder, granules, spheres, fibers or some otherwise shaped materials. Mixtures of more than one filler are also possible. Note that fillers may be functional (e.g., grinding aids such as lubricant, porosity inducers, and/or secondary abrasive grain) or more inclined toward non-functional qualities such as aesthetics (e.g., coloring agent). In a specific implementation, the filler includes potassium fluoroborate and/or manganese compounds, e.g., chloride salts of manganese, for instance an eutectic salt made by fusing manganese dichloride ($MnCl_2$) and potassium chloride (KCl), available from Washington Mills under the designation of MKCS.

[0055] A non-exhaustive list of active fillers can include Cryolite, PAF, KBF_4, K_2SO_4, barium sulfate, sulfides (FeS_2, ZnS), NaCl/KCl, low melting metal oxides, or combinations thereof. Any or all of these additional ingredients can be combined with the blend of abrasive particles, the bond material or with a mixture of the blend of abrasive particles and bond material. An active filler material, such as PAF, which is a mixture of K_3AlF_6 and $KAlF_4$, can be added to the bond material in order to corrode certain workpieces, such as metals and reduce the friction between the wheel and workpiece.

[0056] A non-exhaustive list of inactive fillers can include CaO, $CaCO_3$, $Ca(OH)_2$, $CaSiO_3$, Kyanite (a mixture of Al_2O_3-SiO_2), Saran (Polyvinylidene chloride), Nephenline (Na, K) Al_SiO_4, wood powder, coconut shell flour, stone dust, feldspar, kaolin, quartz,

other forms of silica, short glass fibers, asbestos fibers, balotini, surface-treated fine grain (silicon carbide, corundum etc.), pumice stone, cork powder and combinations thereof.

[0057] The abrasive layers can include any combination of active fillers and inactive fillers. It will be appreciated that one or more of the abrasive layers may incorporate only one type of filler (i.e., an active filler or inactive filler). In particular instances, the content of active filler within an abrasive layer can be greater than a content of the inactive filler within the same abrasive layer. For other embodiments, the content of inactive filler in an abrasive layer can be greater than a content of active filler within the same abrasive layer. For at least one embodiment, an abrasive layer can include a difference in content (wt% based on the total weight of the fillers in the abrasive layer or vol% based on the total volume of the fillers in the abrasive layer) of at least 1%, based on the equation [(Fa-Fi)/Fa]x100%, wherein Fa represents the content of the active filler and Fi represents the content of the inactive filler.

[0058] In other embodiments, the difference in content of the active fillers versus the content of inactive fillers can be at least about 3%, such as, at least about 5%, at least about 8%, at least about 10%, at least about 15%, at least about 20%, at least about 25%, at least about 30%, at least about 35%, at least about 40%, at least about 45%, at least about 50%, at least about 55%, at least about 60%, at least about 65%, at least about 70%, at least about 75%, at least about 80%, at least about 85%, at least about 90%, or by at least about 95%. Alternatively, the difference in content of the active filler relative to the content of the inactive filler for the total contents of fillers can be not greater than about 95%, not greater than about 90%, not greater than about 85%, not greater than about 80%, not greater than about 75%, not greater than about 70%, not greater than about 65%, not greater than about 60%, not greater than about 55%, not greater than about 50%, not greater than about 45%, not greater than about 40%, not greater than about 35%, not greater than about 30%, not greater than about 25%, not greater than about 20%, not greater than about 15%, not greater than about 10%, or not greater than about 5%. The difference between the content of the active fillers and the inactive fillers can be within a range between any of these minimum and maximum percentages.

[0059] In a particular embodiment, the abrasive layer can include a plurality of fillers, wherein each of the fillers may be present in different contents relative to each other. For example, at least one abrasive layer of a thin wheel abrasive article according to an embodiment can include a first filler, which may be present in an amount of at least about 30 vol% for a total volume of the fillers within the abrasive layer. In certain instances, the content of the first filler may be greater, such as at least about 40 vol%, or even at least about 50 vol%. In another non-limiting embodiment, the content of the first filler can be not greater than about 80 vol% of the total volume of the fillers within the abrasive layer, such as not greater than about 70 vol%, or even not greater than about 60 vol%. The abrasive layer can have a first filler content within a range between any of the minimum and maximum percentages noted above.

[0060] The first filler of an embodiment can include an active filler or inactive filler. According to one embodiment, the first filler can include pyrite, and more particularly can include a combinationof pyrite and at least one of a sulfide, oxide, and the like. The first filler can be pyrox.

[0061] In some embodiments, the average particle size of the first filler can be not greater than about 40 microns. In some examples, the average particle size of the first filler can be not greater than about 30 microns, such as not greater than about 20 microns, not greater than about 15 microns, not greater than about 10 microns, or even not greater than about 8 microns. In other non-limiting embodiments, the first filler can have an average particle size of at least about 0.1 microns, such as at least about 1 micron, at least about 2 microns, or even at least about 3 microns. The average particle size of the first filler can be within a range between any of the minimum and maximum values noted above.

[0062] In other embodiments, the abrasive layer may comprise a second filler. The second filler may include any of the filler materials noted herein. The second filler material can have a composition that is different than a composition of the first filler, and in particular, may have a completely distinct composition as compared to the first filler. In certain instances, the second filler material can include potassium. The second filler may further comprise aluminum, fluoride or a combination thereof. For example, the

second filler may comprise a compound including potassium, aluminum, and fluoride. In one particular instance, the second filler may consist essentially of $KAlF_4$. In another embodiment, the second filler may consist essentially of PAF.

[0063] In some embodiments, the abrasive layer may comprise a greater content of the first filler (vol%) as compared to a content of the second filler (vol%). The abrasive layer may comprise a ratio (V1/V2) of at least about 1, wherein V1 represents a content of the first filler (vol%) within the abrasive layer and V2 represents a content of the second filler (vol%) within the abrasive layer. In other examples, the ratio (V1/V2) may be at least about 1.1, at least about 1.2, at least about 1.3, at least about 1.5, at least about 1.6. In other non-limiting embodiments, the ratio (V1/V2) may be not greater than about 3, such as not greater than about 2.6, not greater than about 2.2, or even not greater than about 1.8, or even not greater than about 1.6. The ratio (V1/V2) can be within a range between any of the minimum and maximum values noted above.

[0064] In a particular embodiment, the second filler can be at least about 20 vol% of a total volume of the fillers. For example, the second filler can be at least about 30 vol% of the total volume of the fillers, such as at least about 35 vol%, or even at least about 40 vol%. In certain non-limiting examples, the second filler can be not greater than about 70 vol% of the total volume of the fillers, such as not greater than about 60 vol%, or even not greater than about 50 vol%. The second filler content can be within a range between any of the minimum and maximum values noted above.

[0065] In some instances, the second filler may comprise an average particle size of not greater than about 75 microns. For example, the average particle size of the second filler can be not greater than about 65 microns, such as not greater than about 55 microns, or even not greater than about 45 microns. In other non-limiting embodiments, the average particle size of the second filler can be at least about 0.1 microns, at least about 1 micron, at least about 5 microns, such as at least about 15 microns, or even at least about 25 microns. The second filler average particle size can be within a range between any of the minimum and maximum values noted above.

[0066] In other embodiments, any one of the abrasive layers of the thin wheel abrasive article may comprise a third filler. The third filler may include any of the filler materials noted herein. The third filler material can have a composition that is different than a composition of the first filler and the second filler, and in particular, may have a completely distinct composition as compared to the first filler and the second filler. According to one embodiment, the third filler may include calcium. The third filler may further comprise oxygen, or a compound including calcium and oxygen. For example, in one particular embodiment, the third filler may include CaO, and more particularly, can consist essentially of CaO.

[0067] The third filler may comprise an average particle size of not greater than about 75 microns. In particular instances, the third filler average particle size can be not greater than about 65 microns, such as not greater than about 55 microns. Non-limiting embodiments may include a third filler having an average particle size of at least about 0.5 microns, such as at least about 1 micron, at least about 5 microns, at least about 10 microns, at least about 15 microns, such as at least about 25 microns, or even at least about 35 microns. The third filler average particle size can be within a range between any of the minimum and maximum values noted above.

[0068] The abrasive layer also may comprise a greater content of the first filler (vol%) as compared to the content of the third filler (vol%). The abrasive layer may comprise a ratio (V1/V3) of at least about 1, wherein V1 represents a content of the first filler (vol%) within the abrasive layer, and V3 represents a content of the third filler (vol%) within the abrasive layer. In other examples the ratio (V1/V3) may be at least about 3, such as at least about 6, at least about 10, at least about 15, or even at least about 18. In other non-limiting embodiments, the ratio (V1/V3) can be not greater than about 60, such as not greater than about 55, not greater than about 50, not greater than about 45, or even not greater than about 30, not greater than about 25, or even not greater than about 23. The ratio (V1/V3) can be within a range between any of the minimum and maximum values noted above.

[0069] Still other embodiments of the abrasive layer may comprise a greater content of a second filler (vol%) as compared to a content of the third filler (vol%). The abrasive layer may comprise a ratio (V2/V3) of at least about 1, wherein V2 represents a content of the second filler (vol%) within the abrasive layer and V3 represents a content of the third filler (vol%) within the abrasive layer. In some examples, the ratio (V2/V3) can be at least about 1.5, at least about 3, at least about 6, at least about 12, or even at least about 15. Non-limiting examples may include the ratio (V2/V3) can be not greater than about 60, such as not greater than about 55, not greater than about 50, not greater than about 45, or even not greater than about 30. The ratio (V2/V3) can be within a range between any of the minimum and maximum values noted above.

[0070] In a particular embodiment, the third filler can be at least about 1 vol% of a total volume of the fillers. In certain instances, the third filler can be greater, such as at least about 1.5 vol%, or even at least about 2 vol%. In another non-limiting embodiment, the third filler can be not greater than about 10 vol% of the total volume of the fillers, such as not greater than about 8 vol%, not greater than about 6 vol%, or even not greater than about 4 vol%. The fillers can have a third filler content within a range between any of the minimum and maximum values noted above.

[0071] In other embodiments, any one of the abrasive layers of the thin wheel abrasive article may include a fourth filler, alone or in addition to any of the other filler materials described herein. The fourth filler may include any of the filler materials noted herein. The fourth filler material can have a composition that is different than a composition of the first filler, the second filler, and third filler, and in particular, may have a completely distinct composition as compared to the first filler, the second filler, and the third filler. According to one embodiment, the third filler may include carbon, and in particular, may consist essentially of carbon black.

[0072] Embodiments of the fourth filler may comprise an average particle size of not greater than about 40 microns. For example, the fourth filler average particle size may be not greater than about 30 microns, or even not greater than about 20 microns. Non-limiting examples of the fourth filler average particle size can be at least about 0.1

microns, at least about 1 micron, at least about 5 microns, or even least about 10 microns. The fourth filler average particle size may be within a range between any of the minimum and maximum values noted above.

[0073] Other examples of the abrasive layer may comprise a greater content of the first filler (vol%) as compared to a content of the fourth filler (vol%). The abrasive layer may comprise a ratio (V1/V4) of at least about 1, wherein V1 represents a content of the first filler (vol%) within the abrasive layer and V4 represents a content of the fourth filler (vol%) within the abrasive layer. Alternatively, the ratio (V1/V4) can be at least about 3, such as at least about 6, at least about 10, at least about 15, or even at least about 18. Other non-limiting embodiments of the ratio (V1/V4) can be not greater than about 90, not greater than about 80, such as not greater than about 60, not greater than about 50, not greater than about 45, not greater than about 35, not greater than about 30, or even not greater than about 25. The ratio (V1/V4) can be within a range between any of the minimum and maximum values noted above.

[0074] Examples of the abrasive layer may comprise a greater content of a second filler (vol%) as compared to a content of the fourth filler (vol%). The abrasive layer may comprise a ratio (V2/V4) of at least about 1, wherein V2 represents a content of the second filler (vol%) within the abrasive layer and V4 represents a content of the fourth filler (vol%) within the abrasive layer. In a particular embodiment, the ratio (V2/V4) can be at least about 3, such as at least about 6. Non-limiting examples of the ratio (V2/V4) can be not greater than about 90, not greater than about 80, such as not greater than about 60, not greater than about 50, not greater than about 45, not greater than about 35, not greater than about 30, or even not greater than about 25. The ratio (V2/V4) can be within a range between any of the minimum and maximum values noted above.

[0075] In still another embodiment, the abrasive layer may comprise a greater content of the fourth filler (vol%) as compared to a content of a third filler (vol%). The abrasive layer may comprise substantially the same content (vol%) of the third filler and the fourth filler. The abrasive layer may comprise a ratio (V3/V4) of at least about 0.2, wherein V3 represents a content of the third filler (vol%) within the abrasive layer and V4 represents

a content of the fourth filler (vol%) within the abrasive layer. Other examples of the ratio (V3/V4) can be at least about 0.4, such as at least about 0.6, or even at least about 0.8. Other non-limiting embodiments of the ratio (V3/V4) can be not greater than about 90, not greater than about 80, such as not greater than about 60, not greater than about 50, not greater than about 45, not greater than about 35, not greater than about 30, not greater than about 10, not greater than about 1.8, such as not greater than about 1.5, not greater than about 1.4, or even not greater than about 1.3. The ratio (V3/V4) can be within a range between any of the minimum and maximum values noted above.

[0076] Still, in another embodiment, the abrasive layer may comprise a greater content of the third filler (vol%) as compared to a content of a fourth filler (vol%). The abrasive layer may comprise a ratio (V4/V3) of at least about 0.2, wherein V3 represents a content of the third filler (vol%) within the abrasive layer and V4 represents a content of the fourth filler (vol%) within the abrasive layer. Other examples of the ratio (V4/V3) can be at least about 0.4, such as at least about 0.6, or even at least about 0.8. Other non-limiting embodiments of the ratio (V4/V3) can be not greater than about 90, not greater than about 80, such as not greater than about 60, not greater than about 50, not greater than about 45, not greater than about 35, not greater than about 30, not greater than about 10, not greater than about 1.8, such as not greater than about 1.5, not greater than about 1.4, or even not greater than about 1.3. The ratio (V4/V3) can be within a range between any of the minimum and maximum values noted above.

[0077] Examples of the abrasive layer may comprise a fourth filler (vol%). For example, the fourth filler can be at least about 0.1 vol% of a total volume of the fillers. Alternatively, the fourth filler can be at least about 0.5 vol%, at least about 1 vol%, at least about 2 vol%, at least about 2.5 vol% of the total volume of the fillers. Non-limiting embodiments of the fourth filler can be not greater than about 5 vol% of the total volume of the fillers, such as not greater than about 4.5 vol%, not greater than about 4 vol%, or even not greater than about 3.5 vol%. The vol% of the fourth filler in the total volume of the fillers can be within a range between any of the minimum and maximum values noted above.

[0078] In other embodiments, the abrasive layer may comprise a combination of the first filler, a second filler, a third filler, and a fourth filler. For example, the abrasive layer may comprise a total content of the first filler, second filler, third filler, and fourth filler of at least about 15 vol% for a total volume of the abrasive layer. Alternatively, the total content of the first filler, second filler, third filler, and fourth filler may be at least about 18 vol% of the total volume of the abrasive layer, such as at least about 20 vol%, at least about 22 vol%, or even at least about 25 vol%. Non-limiting embodiments may include the total content of the first filler, second filler, third filler, and fourth filler being not greater than about 40 vol% of the total volume of the abrasive layer, such as not greater than about 35 vol%, or even not greater than about 32 vol%. The filler content of the abrasive layer can be within a range between any of the minimum and maximum values noted above.

[0079] Any of the foregoing volume percentages and ratios based on volume percent are applicable for weight percent and ratio of weight percent as well. Weight percent can be based on the total weight of the abrasive layer.

[0080] Techniques that can be used to produce the bonded abrasive article, e.g., a thin wheel with or without reinforcement, include, for example, cold pressing, warm pressing or hot pressing. Cold pressing, for instance, is described in U.S. Pat. No. 3,619,151, which is incorporated herein by reference. During cold pressing, the materials in the mold are maintained at ambient temperature, e.g., normally less than about 30º centigrade (C). Pressure is applied to the uncured mass of material by suitable means, such as a hydraulic press. The pressure applied can be, e.g., in the range of about 70.3 kg/cm2 (0.5 tsi) to about 2109.3 kg/cm2 (15 tsi), and more typically in the range of about 140.6 kg/cm2 (1 tsi) to about 843,6 kg/cm2 (6 tsi). The holding time within the press can be, for example, within the range of from about 2.5 seconds to about 1 minute.

[0081] Warm pressing is a technique very similar to cold pressing, except that the temperature of the mixture in the mold is elevated, usually to a temperature below about 120º C, and more often, below about 100º C. Suitable pressure and holding time parameters can be, for example, the same as in the case of cold pressing.

[0082] Hot pressing is described, for example, in a Bakelite publication, RutaphenTM--Resins for Grinding Wheels--Technical Information. (KN 50E-09.92-G&S-BA), and in Another Bakelite publication: Rutaphen Phenolic Resins--Guide/Product Ranges/Application (KN107/e-10.89 GS-BG). Useful information can also be found in Thermosetting Plastics, edited by J. F. Monk, Chapter 3 ("Compression Moulding of Thermosets"), 1981 George Goodwin Ltd. in association with The Plastics and Rubber Institute. For the purpose of this disclosure, the scope of the term "hot pressing" includes hot coining procedures, which are known in the art. In a typical hot coining procedure, pressure is applied to the mold assembly after it is taken out of the heating furnace.

[0083] To illustrate, an abrasive article can be prepared by disposing layers of a mixture including one or more types of abrasive grains or particles, bond material and, optionally, other ingredients, below and/or above one or more reinforcement layer(s) in an appropriate mold, usually made of stainless-, high carbon-, or high chrome-steel. Shaped plungers may be employed to cap off the mixture. Cold preliminary pressing is sometimes used, followed by preheating after the loaded mold assembly has been placed in an appropriate furnace. The mold assembly can be heated by any convenient method: electricity, steam, pressurized hot water, hot oil or gas flame. A resistance- or induction-type heater can be employed. An inert gas like nitrogen may be introduced to minimize oxidation during curing.

[0084] The specific temperature, pressure and time ranges can vary and will depend on the specific materials employed, the type of equipment in use, dimensions and other parameters. Pressures can be, for example, in the range of from about 70.3 kg/cm^2 (0.5 tsi) to about 703.2 kg/cm^2 (5.0 tsi), and more typically, from about 70.3 kg/ cm^2 (0.5 tsi) to about 281.2 kg/ cm^2 (2.0 tsi). The pressing temperature for this process is typically in the range of about 115ºC to about 200ºC; and more typically, from about 140ºC to about 190ºC. The holding time within the mold is usually about 30 to about 60 seconds per millimeter of abrasive article thickness.

[0085] In the embodiments employing an organic bond material, the bonded abrasive article can be formed by curing the organic bond material. As used herein, the term "final

cure temperature" is the temperature at which the molded article is held to effect polymerization, e.g., cross-linking, of the organic bond material, thereby forming the abrasive article. As used herein, "cross-linking" refers to the chemical reaction(s) that take(s) place in the presence of heat and often in the presence of a cross-linking agent, e.g., “hexa” or hexamethylenetetramine, whereby the organic bond composition hardens. Generally, the molded article is soaked at a final cure temperature for a period of time, e.g., between 6 hours and 48 hours, e.g., between 10 and 36 hours, or until the center of mass of the molded article reaches the cross-linking temperature and desired grinding performance (e.g., density of the cross-link). In an embodiment, the molded article can be soaked for between 20 and 30 hours.

[0086] According to certain embodiments, the curing temperature can be in the range of from about 150ºC to about 250º C. In more specific embodiments employing organic bonds, the curing temperature can be in the range of about 150ºC. to about 230º C. Polymerization of phenol based resins, for example, generally takes place at a temperature in the range of between about 110º C and about 225ºC. Resole resins generally polymerize at a temperature in a range of between about 140º C and about 225º C and novolac resins generally at a temperature in a range of between about 110º C and about 195º C.

[0087] To illustrate, a green body for producing a reinforced bonded abrasive article may be pre-heated to an initial temperature, e.g., about 100º C where it is soaked, for instance, for a time period, from about 0.5 hours to several hours. Then the green body can be heated, over a period of time, e.g. several hours, to a final cure temperature where it is held or soaked for a time interval suitable to effect the cure. For example, a green body can be soaked at a final temperature of approximately 185 ºC for approximately 26 hours. Once the bake cycle is completed, the abrasive article, e.g., the thin wheel with or without reinforcement, can be air-cooled. If desired, subsequent steps such as edging, finishing, truing, balancing and so forth, can be conducted according to standard practices.

The Blend of Abrasive Particles

[0088] Bonded abrasive tools such as thin wheels with or without reinforcement, including depressed center wheels, can be prepared by combining one or more types of abrasive particles or grains, a bond material (e.g., an organic material (resin) or an inorganic material), and in many cases other ingredients, such as, for instance, active or inactive fillers, processing aids, lubricants, crosslinking agents, antistatic agents and so forth.

[0089] In an embodiment, the invention is directed to an abrasive article. The abrasive article includes a thin wheel tool having a body including a blend of abrasive particles contained in a bond material. The blend of abrasive particles can include a first type of abrasive particle, such as a shaped abrasive particle, and a second type of abrasive particle different from the first type of abrasive particle, where the second type of abrasive particle includes at least one of zirconium, iron, silicon, titanium.

[0090] The blend can also include a first type of abrasive particles contained within a first abrasive layer and a second type of abrasive particles contained in a second abrasive layer, wherein the second abrasive layer is distinct from the first abrasive layer. That is, the blend of abrasive particles do not necessarily need to be contained within the same layer, however, in certain embodiments, a single layer can include a combination of two or more different types of abrasive particles. In particular instances, a first type of abrasive particle may be contained within one or more grinding layer and the second type of abrasive particle may be contained within one or more fine back layers. As described herein, the bond material between the abrasive layers may be the same or different.

[0091] A type of abrasive particle can be defined by at least a composition, a mechanical property (e.g., hardness, friability, etc.), particle size, particle shape, and a combination thereof. In an embodiment, the first type of abrasive particle is different from the second type of abrasive particle by at least one particle characteristic selected from the group consisting of friability, hardness, toughness, density, porosity, composition, average particle size, average grain size, or a combination thereof. In another embodiment, the blend of abrasive particles can include a third type of abrasive particle that can be different from at least one of the first type of abrasive particle and the second type of

abrasive particle by at least one particle characteristic selected from the group consisting of friability, hardness, toughness, density, porosity, composition, average particle size, average grain size, or a combination thereof.

[0092] The blend of abrasive particles can include various combinations of the different types of abrasive particles, including at least the first and second types of abrasive particles. For example, the blend includes a blend of between at least about 1 wt% and about 99 wt% of the first type of abrasive particle, and between at least about 1 wt% and about 99 wt% of the second type of abrasive particle, based on the total weight of the blend of abrasive particles. Each type of abrasive particle can be present in a range between these minimum and maximum percentages.

[0093] In an embodiment, the blend of abrasive particles includes at least about 3 wt%, at least about 5 wt%, at least about 8 wt%, at least about 10 wt%, at least about 15 wt%, at least about 20 wt%, at least about 25 wt%, at least about 30 wt%, at least about 35 wt%, at least about 40 wt%, at least about 45 wt%, at least about 50 wt%, at least about 55 wt%, at least about 60 wt%, at least about 65 wt%, at least about 70 wt%, at least about 75 wt%, at least about 80 wt%, at least about 85 wt%, at least about 90 wt%, or at least about 95 wt% of the first type of abrasive particle, based on the total weight of the blend of abrasive particles. In another embodiment, the blend of abrasive particles includes not greater than about 95 wt%, not greater than about 90 wt%, not greater than about 85 wt%, not greater than about 80 wt%, not greater than about 75 wt%, not greater than about 70 wt%, not greater than about 65 wt%, not greater than about 60 wt%, not greater than about 55 wt%, not greater than about 50 wt%, not greater than about 45 wt%, not greater than about 40 wt%, not greater than about 35 wt%, not greater than about 30 wt%, not greater than about 25 wt%, not greater than about 20 wt%, not greater than about 15 wt%, not greater than about 10 wt%, or not greater than about 5 wt% of the first type of abrasive particle, based on the total weight of the blend of abrasive particles. The first type of abrasive particle can be present within a range between any of these minimum and maximum percentages. For example, the first type of abrasive particle can be present in a range between about 60 wt% and about 75 wt%, such as between about 65 wt% and about 70 wt%.

[0094] In a further embodiment, the blend of abrasive particles includes at least about 0.01 wt%, such as at least about 0.1 wt%, at least about 0.2 wt%, at least about 0.5 wt%, at least about 1 wt%, at least about 2 wt%, at least about 3 wt%, at least about 5 wt%, at least about 8 wt%, at least about 10 wt%, at least about 15 wt%, at least about 20 wt%, at least about 25 wt%, at least about 30 wt%, at least about 35 wt%, at least about 40 wt%, at least about 45 wt%, at least about 50 wt%, at least about 55 wt%, at least about 60 wt%, at least about 65 wt%, at least about 70 wt%, at least about 75 wt%, at least about 80 wt%, at least about 85 wt%, at least about 90 wt%, or at least about 95 wt% of the second type of abrasive particle, based on the total weight of the blend of abrasive particles. In another embodiment, the blend of abrasive particles includes not greater than about 95 wt%, not greater than about 90 wt%, not greater than about 85 wt%, not greater than about 80 wt%, not greater than about 75 wt%, not greater than about 70 wt%, not greater than about 65 wt%, not greater than about 60 wt%, not greater than about 55 wt%, not greater than about 50 wt%, not greater than about 45 wt%, not greater than about 40 wt%, not greater than about 35 wt%, not greater than about 30 wt%, not greater than about 25 wt%, not greater than about 20 wt%, not greater than about 15 wt%, not greater than about 10 wt%, not greater than about 5 wt%, not greater than about 3 wt%, not greater than about 2 wt%, not greater than about 1 wt%, not greater than about 0.5 wt%, not greater than about 0.2 wt%, not greater than about 0.1 wt%, or even not greater than about 0.01 wt% of the second type of abrasive particle, based on the total weight of the blend of abrasive particles. The second type of abrasive particle can be present within a range between any of these minimum and maximum percentages.

[0095] Within the blend of abrasive particles, the first type of abrasive particle can include various first average particle sizes (PS_1) and the second type of abrasive particle can include various second average particle sizes (PS_2). Based on the equation $[(PS_1-PS_2)/PS_1]x100\%$, the first average particle size can, in an embodiment, be at least about 1% greater than the second average particle size, such as at least about 3%, at least about 5%, at least about 8%, at least about 10%, at least about 15%, at least about 20%, at least about 25%, at least about 30%, at least about 35%, at least about 40%, at least about 45%, at least about 50%, at least about 55%, at least about 60%, at least about 65%, at least

about 70%, at least about 75%, at least about 80%, at least about 85%, at least about 90%, or at least about 95% greater than the second average particle size. In another embodiment, the first average particle size can be not greater than about 95 % of the second average particle size, not greater than about 90%, not greater than about 85%, not greater than about 80%, not greater than about 75%, not greater than about 70%, not greater than about 65%, not greater than about 60%, not greater than about 55%, not greater than about 50%, not greater than about 45%, not greater than about 40%, not greater than about 35%, not greater than about 30%, not greater than about 25%, not greater than about 20%, not greater than about 15%, not greater than about 10%, or not greater than about 5% of the second average particle size. In a further embodiment, the first average particle size can be greater than the second average particle size within a range between any of the above minimum and maximum percentages.

[0096] Based on the equation $[(PS_2-PS_1)/PS_2]x100\%$, the second average particle size can, in an embodiment, be at least about 1% greater than the first average particle size, such as at least about 3%, at least about 5%, at least about 8%, at least about 10%, at least about 15%, at least about 20%, at least about 25%, at least about 30%, at least about 35%, at least about 40%, at least about 45%, at least about 50%, at least about 55%, at least about 60%, at least about 65%, at least about 70%, at least about 75%, at least about 80%, at least about 85%, at least about 90%, or at least about 95% greater than the first average particle size. In another embodiment, the second average particle size can be not greater than about 95 % of the first average particle size, not greater than about 90%, not greater than about 85%, not greater than about 80%, not greater than about 75%, not greater than about 70%, not greater than about 65%, not greater than about 60%, not greater than about 55%, not greater than about 50%, not greater than about 45%, not greater than about 40%, not greater than about 35%, not greater than about 30%, not greater than about 25%, not greater than about 20%, not greater than about 15%, not greater than about 10%, or not greater than about 5% of the first average particle size. In a further embodiment, the second average particle size can be greater than the first average particle size within a range between any of the above minimum and maximum percentages.

[0097] The blend of abrasive particles can also include various characteristics. In an embodiment, the blend of abrasive particles can include a weighted average density between about 2 g/cm^3 and about 5 g/cm^3. In embodiments, the abrasive blend may have a weighted average density of not more than about 4.75 g/cm^3, such as not more than about 4.7 g/cm^3, not more than about 4.6 g/cm^3, not more than about 4.5 g/cm^3, not more than about 4.4 g/cm^3, not more than about 4.3 g/cm^3, not more than about 4.2 g/cm^3, not more than about 4.1 g/cm^3, not more than about 4.0 g/cm^3, not more than about 3.9 g/cm^3, not more than about 3.8 g/cm^3, not more than about 3.7 g/cm^3, not more than about 3.6 g/cm^3, or not more than about 3.5 g/cm^3. The abrasive blend may have a weighted average density of at least about 2.5 g/cm^3, such as at least about 2.75 g/cm^3, at least about 2.85 g/cm^3, at least about 3.0 g/cm^3, at least about 3.15 g/cm^3, at least about 3.2 g/cm^3, at least about 3.3 g/cm^3, at least about 3.4 g/cm^3, at least about 3.5 g/cm^3, at least about 3.6 g/cm^3, at least about 3.65 g/cm^3, at least about 3.7 g/cm^3, at least about 3.75 g/cm^3, or at least about 3.8 g/cm^3. It will be understood that by "weighted average density," in the context of abrasive blends of the present disclosure, the density of each type of particle is first calculated. Then, each density is assigned a weight based on its percentage in the total abrasive blend. The sum of the densities of each type of particle multiplied by its respective weight gives a final weighted average density for an abrasive particle blend.

[0098] The blend of abrasive particles can also exhibit other characteristics, such as Moh’s hardness values and Knoop hardness values. The abrasive blend may have a weighted average Moh's hardness of at least about 6, such as at least about 6.2, at least about 6.3, at least about 6.4, at least about 6.5, at least about 6.6, at least about 6.8, at least about 6.9, at least about 7.0, at least about 7.10, at least about 7.15, at least about 7.25, at least about 7.35, at least about 7.45, at least about 7.5, at least about 7.6, at least about 7.7, at least about 7.8, at least about 7.9, or at least about 8.0. The abrasive blend may have a weighted average Moh's hardness of less than about 10, such as less than about 9.9, less than about 9.8, less than about 9.7, less than about 9.6, less than about 9.5, less than about 9.4, less than about 9.3, less than about 9.2, less than about 9.1, less than about 9, less than about 8.9, less than about 8.8, less than about 8.75, less than about 8.6,

less than about 8.5, less than about 8.4, or less than about 8.3. It will be understood that "weighted average Moh's hardness" values, in the context of abrasive blends of the present disclosure, are calculated in a similar fashion to the "weighted average density," as described above, with the exception that instead of density values, Moh's hardness values for each type of abrasive particle are used.

[0099] The abrasive blend may have a weighted average Knoop hardness value of at least about 1000, such at least about 1550, at least about 1600, at least about 1625, at least about 1650, at least about 1700, at least about 1750, at least about 1800, at least about 1850, at least about 1900, at least about 2000, at least about 2100, at least about 2250, at least about 2300, at least about 2400, at least about 2500, at least about 2600, at least about 2700, at least about 2800, at least about 2900, at least about 3000, at least about 3100, at least about 3250, at least about 3300, at least about 3400, at least about 3500, at least about 3600, at least about 3750, at least about 3800, at least about 3900, at least about 4000, at least about 4100, at least about 4200, at least about 4300, at least about 4400, at least about 4500, at least about 4600, at least about 4750, at least about 4900, at least about 5000, at least about 5100, at least about 5200, at least about 5300, at least about 5400, at least about 5500, at least about 5700, or at least about 6000. The abrasive blend may have a weighted average Knoop hardness value of less than about 8000, such at less than about 7900, less than about 7800, less than about 7700, less than about 7600, less than about 7500, less than about 7400, less than about 7300, less than about 7200, less than about 7100, less than about 7000, less than about 6900, less than about 6800, less than about 6700, less than about 6600, less than about 6500, less than about 6400, less than about 6300, less than about 6200, less than about 6250, less than about 6100, less than about 6000, less than about 5900, less than about 5800, less than about 5750, less than about 5600, less than about 5500, less than about 5400, less than about 5300, or less than about 5250. It will be understood that "weighted average Knoop hardness" values, in the context of abrasive blends of the present disclosure, are calculated in a similar fashion to the "weighted average density," as described above, with the exception that instead of density values, Knoop hardness values for each type of abrasive particle are used.

[00100] The blend of abrasive particles can include various distributions of each of the first and second types of particles. For example, at least one of the first type of abrasive particle and the second type of abrasive particle can be uniformly dispersed throughout the blend of abrasive particles. In an embodiment, the first type of abrasive particle can be substantially uniformly dispersed throughout the volume of the bond material, substantially uniformly dispersed throughout the volume of the body, non-uniformly distributed throughout the bond material, or preferentially distributed at an exterior surface of the body, wherein the first type of abrasive particle comprises a concentration at an exterior surface of the body that is greater than a concentration of the second type of abrasive particle at the surface of the body. In particular, the body can include a first concentration (C_1) of the first type of abrasive particle at the exterior surface and a second concentration (C_2) of the second type of abrasive particle at the exterior surface that is different from the first concentration. Based on the equation $[(C_1-C_2)/C_1]x100\%$, the first concentration can be greater than the second concentration by at least about 1%, such as by at least about 3%, at least about 5%, at least about 8%, at least about 10%, at least about 15%, at least about 20%, at least about 25%, at least about 30%, at least about 35%, at least about 40%, at least about 45%, at least about 50%, at least about 55%, at least about 60%, at least about 65%, at least about 70%, at least about 75%, at least about 80%, at least about 85%, at least about 90%, or by at least about 95%. Alternatively, the first concentration can be greater than the second concentration by not greater than about 95 %, not greater than about 90%, not greater than about 85%, not greater than about 80%, not greater than about 75%, not greater than about 70%, not greater than about 65%, not greater than about 60%, not greater than about 55%, not greater than about 50%, not greater than about 45%, not greater than about 40%, not greater than about 35%, not greater than about 30%, not greater than about 25%, not greater than about 20%, not greater than about 15%, not greater than about 10%, or not greater than about 5%. The first concentration can be greater than the second concentration within a range between any of these minimum and maximum values.

[00101] In another embodiment, the second type of abrasive particle can be substantially uniformly dispersed throughout the volume of the bond material, substantially uniformly

dispersed throughout the volume of the body, non-uniformly distributed throughout the bond material, or preferentially distributed at an exterior surface of the body, wherein the second type of abrasive particle comprises a concentration at an exterior surface of the body that is greater than a concentration of the first type of abrasive particle at the surface of the body. In particular, the body can include a first concentration (C_1) of the first type of abrasive particle at the exterior surface and a second concentration (C_2) of the second type of abrasive particle at the exterior surface that is different from the first concentration. Based on the equation $[(C_2-C_1)/C_2]x100\%$, the second concentration can be greater than the first concentration by at least about 1%, such as by at least about 3%, at least about 5%, at least about 8%, at least about 10%, at least about 15%, at least about 20%, at least about 25%, at least about 30%, at least about 35%, at least about 40%, at least about 45%, at least about 50%, at least about 55%, at least about 60%, at least about 65%, at least about 70%, at least about 75%, at least about 80%, at least about 85%, at least about 90%, or by at least about 95%. Alternatively, the second concentration can be greater than the first concentration by not greater than about 95 %, not greater than about 90%, not greater than about 85%, not greater than about 80%, not greater than about 75%, not greater than about 70%, not greater than about 65%, not greater than about 60%, not greater than about 55%, not greater than about 50%, not greater than about 45%, not greater than about 40%, not greater than about 35%, not greater than about 30%, not greater than about 25%, not greater than about 20%, not greater than about 15%, not greater than about 10%, or not greater than about 5%. The second concentration can be greater than the second concentration within a range between any of these minimum and maximum values.

The First Type of Abrasive Particle

[00102] Within the blend of abrasive particles, the first type of abrasive particle can have a certain composition. In an embodiment, the first type of abrasive particle can include seeded-gel particles, such as seeded sintered sol gel alumina particles. In another embodiment, the first type of abrasive particle includes a material selected from the group consisting of oxides, nitrides, carbides, borides, oxynitrides, oxycarbides, and a combination thereof. In a further embodiment, the first type of abrasive particle can

include alumina, which can include alpha alumina. In yet another embodiment, the first type of abrasive particle consists essentially of alpha alumina.

[00103] Within the blend of abrasive particles, the first type of abrasive particle also can include various shapes, structure, or configuration. For example, the first type of abrasive particle can include a shaped abrasive particle. Shaped abrasive particles can have a well-defined and regular arrangement (i.e., non-random) of edges and sides, thus defining an identifiable shape. For example, a shaped abrasive particle may have a polygonal shape as viewed in a plane defined by any two dimensions of length, width, and height (e.g., viewed in a plane defined by a length and a width). Some exemplary polygonal shapes can be triangular, quadrilateral (e.g., rectangular, square, trapezoidal, parallelogram), a pentagon, a hexagon, a heptagon, an octagon, a nonagon, a decagon, and the like. Additionally, the shaped abrasive particle can have a three-dimensional shape defined by a polyhedral shape, such as a prismatic shape or the like. Further, the shaped abrasive particles may have curved edges and/or surfaces, such that the shaped abrasive particles can have convex, concave, ellipsoidal shapes.

[00104] The shaped abrasive particles can be in the form of any alphanumeric character, e.g., 1, 2, 3, etc., A, B, C. etc. Further, the shaped abrasive particles can be in the form of a symbol, trademark, a character selected from the Greek alphabet, the modern Latin alphabet, the ancient Latin alphabet, the Russian alphabet, any other alphabet (e.g., Kanji characters), and any combination thereof.

[00105] FIG. 3A includes a perspective view illustration of an abrasive particle of the first type of abrasive particle, such as a shaped abrasive particle, in accordance with an embodiment. Additionally, FIG. 3B includes a cross-sectional illustration of the abrasive particle of FIG. 3A. The body 301 includes an upper surface 303 and a bottom major surface 304 opposite the upper surface 303. The upper surface 303 and the bottom surface 304 can be separated from each other by side surfaces 305, 306, and 307. As illustrated, the body 301 of the shaped abrasive particle 300 can have a generally triangular shape as viewed in a plane of the upper surface 303. In particular, the body 301 can have a length (Lmiddle) as shown in FIG. 3B, which may be measured at the

bottom surface 304 of the body 301 and extending from a corner 313 through a midpoint 381 of the body 301 to a midpoint at the opposite edge 314 of the body. Alternatively, the body can be defined by a second length or profile length (Lp), which is the measure of the dimension of the body from a side view at the upper surface 303 from a first corner 313 to an adjacent corner 312. Notably, the dimension of Lmiddle can be a length defining a distance between a height at a corner (hc) and a height at a midpoint edge (hm) opposite the corner. The dimension Lp can be a profile length along a side of the particle defining the distance between h1 and h2. Reference herein to the length can be reference to either Lmiddle or Lp.

[00106] The body 301 can further include a width (w) that is the longest dimension of the body and extending along a side. The shaped abrasive particle can further include a height (h), which may be a dimension of the shaped abrasive particle extending in a direction perpendicular to the length and width in a direction defined by a side surface of the body 301. Notably, as will be described in more detail herein, the body 301 can be defined by various heights depending upon the location on the body. In specific instances, the width can be greater than or equal to the length, the length can be greater than or equal to the height, and the width can be greater than or equal to the height.

[00107] Moreover, reference herein to any dimensional characteristic (e.g., h1, h2, hi, w, Lmiddle, Lp, and the like) can be reference to a dimension of a single particle of a batch, a median value, or an average value derived from analysis of a suitable sampling of particles from a batch, where the batch includes shaped abrasive particles from the first type of abrasive particle. Unless stated explicitly, reference herein to a dimensional characteristic can be considered reference to a median value that is a based on a statistically significant value derived from a sample size of suitable number of particles of a batch of particles. Notably, for certain embodiments herein, the sample size can include at least 40 randomly selected particles from a batch of shaped abrasive particles from the first type of abrasive particle. A batch of particles may be a group of particles that are collected from a single process run, and more particularly, may include an amount of shaped abrasive particles suitable for forming a commercial grade abrasive product, such as at least about 20 lbs. of particles.

[00108] In accordance with an embodiment, the body 301 of the shaped abrasive particle can have a first corner height (hc) at a first region of the body defined by a corner 313. Notably, although the corner 313 may represent the point of greatest height on the body 301, the height at the corner 313 does not necessarily represent the point of greatest height on the body 301. The corner 313 can be defined as a point or region on the body 301 defined by the joining of the upper surface 303 and two side surfaces 305 and 307. The body 301 may further include other corners, spaced apart from each other, including for example, corner 311 and corner 312. As further illustrated, the body 301 can include edges 314, 315, and 316 that can separated from each other by the corners 311, 312, and 313. The edge 314 can be defined by an intersection of the upper surface 303 with the side surface 306. The edge 315 can be defined by an intersection of the upper surface 303 and side surface 305 between corners 311 and 313. The edge 316 can be defined by an intersection of the upper surface 303 and side surface 307 between corners 312 and 313.

[00109] As further illustrated, the body 301 can include a second midpoint height (hm) at a second end of the body, which can be defined by a region at the midpoint of the edge 314, which can be opposite the first end defined by the corner 313. The axis 350 can extend between the two ends of the body 301. FIG. 3B is a cross-sectional illustration of the body 301 along the axis 350, which can extend through a midpoint 381 of the body along the dimension of length (Lmiddle) between the corner 313 and the midpoint of the edge 314.

[00110] In accordance with an embodiment, the shaped abrasive particle of the first type of abrasive particle, including for example, the particle of FIGs. 3A and 3B can have an average difference in height, which is a measure of the difference between hc and hm. For convention herein, average difference in height will be generally identified as hc-hm, however it is defined as an absolute value of the difference and it will be appreciated that average difference in height may be calculated as hm-hc when the height of the body 301 at the midpoint of the edge 314 is greater than the height at the corner 313. More particularly, the average difference in height can be calculated based upon a plurality of shaped abrasive particles from a suitable sample size, such as at least 40 particles from a

batch as defined herein. The heights hc and hm of the particles can be measured using a STIL (Sciences et Techniques Industrielles de la Lumiere - France) Micro Measure 3D Surface Profilometer (white light (LED) chromatic aberration technique) and the average difference in height can be calculated based on the average values of hc and hm from the sample.

[00111] As illustrated in FIG. 3B, in one particular embodiment, the body 301 of the shaped abrasive particle may have an average difference in height at different locations at the body. The body can have an average difference in height, which can be the absolute value of [hc-hm] between the first corner height (hc) and the second midpoint height (hm) is at least about 20 microns. It will be appreciated that average difference in height may be calculated as hm-hc when the height of the body 301 at a midpoint of the edge is greater than the height at an opposite corner. In other instances, the average difference in height [hc-hm], can be at least about 25 microns, at least about 30 microns, at least about 36 microns, at least about 40 microns, at least about 60 microns, such as at least about 65 microns, at least about 70 microns, at least about 75 microns, at least about 80 microns, at least about 90 microns, or even at least about 100 microns. In one non-limiting embodiment, the average difference in height can be not greater than about 300 microns, such as not greater than about 250 microns, not greater than about 220 microns, or even not greater than about 180 microns. It will be appreciated that the average difference in height can be within a range between any of the minimum and maximum values noted above. Moreover, it will be appreciated that the average difference in height can be based upon an average value of hc. For example, the average height of the body at the corners (Ahc) can be calculated by measuring the height of the body at all corners and averaging the values, and may be distinct from a single value of height at one corner (hc). Accordingly, the average difference in height may be given by the absolute value of the equation [Ahc-hi]. Furthermore, it will be appreciated that the average difference in height can be calculated using a median interior height (Mhi) calculated from a suitable sample size from a batch of shaped abrasive particles and an average height at the corners for all particles in the sample size. Accordingly, the average difference in height may be given by the absolute value of the equation [Ahc-Mhi].

[00112] In particular instances, the body 301 can be formed to have a primary aspect ratio, which is a ratio expressed as width:length, having a value of at least 1:1. In other instances, the body can be formed such that the primary aspect ratio (w:l) is at least about 1.5:1, such as at least about 2:1, at least about 4:1, or even at least about 5:1. Still, in other instances, the shaped abrasive particle can be formed such that the body has a primary aspect ratio that is not greater than about 10:1, such as not greater than 9:1, not greater than about 8:1, or even not greater than about 5:1. It will be appreciated that the body 301 can have a primary aspect ratio within a range between any of the ratios noted above. It will be further appreciated that any suitable second type of abrasive particle within the blend of abrasive particles, as also described herein, can also have a primary aspect ratio within a range between about 1.5:1 and 10:1, wherein the second type of abrasive particle can include an aspect ratio of at least about 1.5:1, such as at least about 2:1, at least about 4:1, or even at least about 5:1 and not greater than about 10:1, such as not greater than 9:1, not greater than about 8:1, or even not greater than about 5:1. Furthermore, it will be appreciated that reference herein to a height is the maximum height measurable of the shaped abrasive particle. It will be described later that the abrasive particle may have different heights at different positions within the body 301 of the abrasive particle 300.

[00113] In addition to the primary aspect ratio, a shaped abrasive particle can be formed such that the body 301 comprises a secondary aspect ratio, which can be defined as a ratio of length:height, wherein the height is an interior median height (Mhi). In certain instances, the secondary aspect ratio can be within a range between about 5:1 and about 1:3, such as between about 4:1 and about 1:2, or even between about 3:1 and about 1:2.

[00114] In accordance with another embodiment, a shaped abrasive particle can be formed such that the body 301 comprises a tertiary aspect ratio, defined by the ratio width:height, wherein the height is an interior median height (Mhi). The tertiary aspect ratio of the body 101 can be within a range between about 10:1 and about 1.5:1, such as between 8:1 and about 1.5:1, such as between about 6:1 and about 1.5:1, or even between about 4:1 and about 1.5:1.

[00115] According to one embodiment, the body 301 of the shaped abrasive particle can have particular dimensions, which may facilitate improved performance. For example, in one instance, the body can have an interior height (hi), which can be the smallest dimension of height of the body as measured along a dimension between any corner and opposite midpoint edge on the body. In particular instances wherein the body is a generally triangular two-dimensional shape, the interior height (hi) may be the smallest dimension of height (i.e., measure between the bottom surface 304 and the upper surface 305) of the body for three measurements taken between each of the three corners and the opposite midpoint edges. The interior height (hi) of the body of a shaped abrasive particle is illustrated in FIG. 3B. According to one embodiment, the interior height (hi) can be at least about 28% of the width (w). The height (hi) of any particle may be measured by sectioning or mounting and grinding the shaped abrasive particle and viewing in a manner sufficient (e.g., light microscope or SEM) to determine the smallest height (hi) within the interior of the body 301. In one particular embodiment, the height (hi) can be at least about 29% of the width, such as at least about 30%, or even at least about 33% of the width of the body. For one non-limiting embodiment, the height (hi) of the body can be not greater than about 80% of the width, such as not greater than about 76%, not greater than about 73%, not greater than about 70%, not greater than about 68% of the width, not greater than about 56% of the width, not greater than about 48% of the width, or even not greater than about 40% of the width. It will be appreciated that the height (hi) of the body can be within a range between any of the above noted minimum and maximum percentages.

[00116] A batch of shaped abrasive particles from the first type of abrasive particle can be fabricated wherein the median interior height value (Mhi) can be controlled, which may facilitate improved performance. In particular, the median interior height (Mhi) of a batch can be related to a median width of the shaped abrasive particles of the batch in the same manner as described above. Notably, the median interior height (Mhi) can be at least about 28%, such as at least about 29%, at least about 30%, or even at least about 33% of the median width of the shaped abrasive particles of the batch. For one non-limiting embodiment, the median interior height (Mhi) of the body can be not greater

than about 80%, such as not greater than about 76%, not greater than about 73%, not greater than about 70%, not greater than about 68% of the width, not greater than about 56% of the width, not greater than about 48% of the width, or even not greater than about 40% of the median width. It will be appreciated that the median interior height (Mhi) of the body can be within a range between any of the above noted minimum and maximum percentages.

[00117] Furthermore, the batch of shaped abrasive particles may exhibit improved dimensional uniformity as measured by the standard deviation of a dimensional characteristic from a suitable sample size. According to one embodiment, the shaped abrasive particles can have an interior height variation (Vhi), which can be calculated as the standard deviation of interior height (hi) for a suitable sample size of shaped abrasive particles from a batch. According to one embodiment, the interior height variation can be not greater than about 60 microns, such as not greater than about 58 microns, not greater than about 56 microns, or even not greater than about 54 microns. In one non-limiting embodiment, the interior height variation (Vhi) can be at least about 2 microns. It will be appreciated that the interior height variation of the body can be within a range between any of the above noted minimum and maximum values.

[00118] For another embodiment, the body of the shaped abrasive particle can have an interior height (hi) of at least about 400 microns. More particularly, the height may be at least about 450 microns, such as at least about 475 microns, or even at least about 500 microns. In still one non-limiting embodiment, the height of the body can be not greater than about 3 mm, such as not greater than about 2 mm, not greater than about 1.5 mm, not greater than about 1 mm, or even not greater than about 800 microns. It will be appreciated that the height of the body can be within a range between any of the above noted minimum and maximum values. Moreover, it will be appreciated that the above range of values can be representative of a median interior height (Mhi) value for a batch of shaped abrasive particles.

[00119] For certain embodiments herein, the body of the shaped abrasive particle can have particular dimensions, including for example, a width$\geq$length, a length$\geq$height, and a

width≥height. More particularly, the body of the shaped abrasive particle can have a width (w) of at least about 600 microns, such as at least about 700 microns, at least about 800 microns, or even at least about 900 microns. In one non-limiting instance, the body can have a width of not greater than about 4 mm, such as not greater than about 3 mm, not greater than about 2.5 mm, or even not greater than about 2 mm. It will be appreciated that the width of the body can be within a range between any of the above noted minimum and maximum values. Moreover, it will be appreciated that the above range of values can be representative of a median width (Mw) for a batch of shaped abrasive particles.

[00120] The body of the shaped abrasive particle can have particular dimensions, including for example, a length (L middle or Lp) of at least about 0.4 mm, such as at least about 0.6 mm, at least about 0.8 mm, or even at least about 0.9 mm. Still, for at least one non-limiting embodiment, the body can have a length of not greater than about 4 mm, such as not greater than about 3 mm, not greater than about 2.5 mm, or even not greater than about 2 mm. It will be appreciated that the length of the body can be within a range between any of the above noted minimum and maximum values. Moreover, it will be appreciated that the above range of values can be representative of a median length (Ml), which may be more particularly, a median middle length (MLmiddle) or median profile length (MLp)for a batch of shaped abrasive particles.

[00121] The shaped abrasive particle can have a body having a particular amount of dishing, wherein the dishing value (d) can be defined as a ratio between an average height of the body at the corners (Ahc) as compared to a smallest dimension of height of the body at the interior (hi). The average height of the body at the corners (Ahc) can be calculated by measuring the height of the body at all corners and averaging the values, and may be distinct from a single value of height at one corner (hc). The average height of the body at the corners or at the interior can be measured using a STIL (Sciences et Techniques Industrielles de la Lumiere - France) Micro Measure 3D Surface Profilometer (white light (LED) chromatic aberration technique). Alternatively, the dishing may be based upon a median height of the particles at the corner (Mhc) calculated from a suitable sampling of particles from a batch. Likewise, the interior height (hi) can be a median

interior height (Mhi) derived from a suitable sampling of shaped abrasive particles from a batch. According to one embodiment, the dishing value (d) can be not greater than about 2, such as not greater than about 1.9, not greater than about 1.8, not greater than about 1.7, not greater than about 1.6, or even not greater than about 1.5. Still, in at least one non-limiting embodiment, the dishing value (d) can be at least about 0.9, such as at least about 1.0. It will be appreciated that the dishing ratio can be within a range between any of the minimum and maximum values noted above. Moreover, it will be appreciated that the above dishing values can be representative of a median dishing value (Md) for a batch of shaped abrasive particles.

[00122] The shaped abrasive particles of the first type of abrasive particle in accordance with embodiments herein, including for example, the body 301 of the particle of FIG. 3A can have a bottom surface 304 defining a bottom area (A_b). In particular instances the bottom surface 304 can be the largest surface of the body 301 (e.g., the bottom surface 304 can have a greater surface area than the upper surface 303). The bottom surface can have a surface area defined as the bottom area (A_b) that is greater than the surface area of the upper surface 303. Additionally, the body 301 can have a cross-sectional midpoint area (A_m) defining an area of a plane perpendicular to the bottom area and extending through a midpoint 381 of the particle. In certain instances, the body 301 can have an area ratio of bottom area to midpoint area (A_b/A_m) of not greater than about 6. In more particular instances, the area ratio can be not greater than about 5.5, such as not greater than about 5, not greater than about 4.5, not greater than about 4, not greater than about 3.5, or even not greater than about 3. Still, in one non-limiting embodiment, the area ratio may be at least about 1.1, such as at least about 1.3, or even at least about 1.8. It will be appreciated that the area ratio can be within a range between any of the minimum and maximum values noted above. Moreover, it will be appreciated that the above area ratios can be representative of a median area ratio for a batch of shaped abrasive particles.

[00123] Furthermore the shaped abrasive particles of the embodiments herein, including for example, the particle of FIG. 3B can have a normalized height difference of not greater than about 0.3. The normalized height difference can be defined by the absolute value of the equation [(hc-hm)/(hi)]. In other embodiments, the normalized height

difference can be not greater than about 0.26, such as not greater than about 0.22, or even not greater than about 0.19. Still, in one particular embodiment, the normalized height difference can be at least about 0.04, such as at least about 0.05, or even at least about 0.06. It will be appreciated that the normalized height difference can be within a range between any of the minimum and maximum values noted above. Moreover, it will be appreciated that the above normalized height values can be representative of a median normalized height value for a batch of shaped abrasive particles.

[00124] In another instance, the body can have a profile ratio of at least about 0.04, wherein the profile ratio is defined as a ratio of the average difference in height [hc-hm] to the length (Lmiddle) of the shaped abrasive particle, defined as the absolute value of [(hc-hm)/(Lmiddle)]. It will be appreciated that the length (Lmiddle) of the body can be the distance across the body 301 as illustrated in FIG. 3B. Moreover, the length may be an average or median length calculated from a suitable sampling of particles from a batch of shaped abrasive particles as defined herein. According to a particular embodiment, the profile ratio can be at least about 0.05, at least about 0.06, at least about 0.07, at least about 0.08, or even at least about 0.09. Still, in one non-limiting embodiment, the profile ratio can be not greater than about 0.3, such as not greater than about 0.2, not greater than about 0.18, not greater than about 0.16, or even not greater than about 0.14. It will be appreciated that the profile ratio can be within a range between any of the minimum and maximum values noted above. Moreover, it will be appreciated that the above profile ratio can be representative of a median profile ratio for a batch of shaped abrasive particles.

[00125] According to another embodiment, the body can have a particular rake angle, which may be defined as an angle between the bottom surface 304 and a side surface 305, 306 or 307 of the body. For example, the rake angle may be within a range between about 1° and about 80°. For other particles herein, the rake angle can be within a range between about 5° and 55°, such as between about 10° and about 50°, between about 15° and 50°, or even between about 20° and 50°. Formation of a shaped abrasive particle having such a rake angle can improve the abrading capabilities of the abrasive particle

300. Notably, the rake angle can be within a range between any two rake angles noted above.

[00126] According to another embodiment, the shaped abrasive particles herein, including for example the particles of FIGs. 3A and 3B can have an ellipsoidal region 317 in the upper surface 303 of the body 301. The ellipsoidal region 317 can be defined by a trench region 318 that can extend around the upper surface 303 and define the ellipsoidal region 317. The ellipsoidal region 317 can encompass the midpoint 381. Moreover, it is thought that the ellipsoidal region 317 defined in the upper surface can be an artifact of the forming process, and may be formed as a result of the stresses imposed on the mixture during formation of the shaped abrasive particles.

[00127] The shaped abrasive particle can be formed such that the body includes a crystalline material, and more particularly, a polycrystalline material. Notably, the polycrystalline material can include abrasive grains. In one embodiment, the body can be essentially free of an organic material, including for example, a binder. More particularly, the body can consist essentially of a polycrystalline material.

[00128] In one aspect, the body of the shaped abrasive particle can be an agglomerate including a plurality of abrasive particles, grit, and/or grains bonded to each other to form the body 301 of the abrasive particle 300. Suitable abrasive grains can include nitrides, oxides, carbides, borides, oxynitrides, oxyborides, diamond, and a combination thereof. In particular instances, the abrasive grains can include an oxide compound or complex, such as aluminum oxide, zirconium oxide, titanium oxide, yttrium oxide, chromium oxide, strontium oxide, silicon oxide, and a combination thereof. In one particular instance, the abrasive particle 300 is formed such that the abrasive grains forming the body 301 include alumina, and more particularly, may consist essentially of alumina.

[00129] The abrasive grains (i.e., crystallites) contained within the body may have an average grain size that is generally not greater than about 100 microns. In other embodiments, the average grain size can be less, such as not greater than about 80 microns, not greater than about 50 microns, not greater than about 30 microns, not greater than about 20 microns, not greater than about 10 microns, or even not greater than about

1 micron. Still, the average grain size of the abrasive grains contained within the body can be at least about 0.01 microns, such as at least about 0.05 microns, such as at least about 0.08 microns, at least about 0.1 microns, or even at least about 1 micron. It will be appreciated that the abrasive grains can have an average grain size within a range between any of the minimum and maximum values noted above. The size of abrasive grains often is expressed as a grit size, and charts showing a relation between a grit size and its corresponding average particle size, expressed in microns or inches, are known in the art as are correlations to the corresponding United States Standard Sieve (USS) mesh size. Grain size selection depends upon the application or process for which the abrasive tool is intended. Different sizes also can be used.

[00130] In accordance with certain embodiments, the shaped abrasive particle can be a composite article including at least two different types of abrasive grains within the body of the shaped abrasive particle. It will be appreciated that different types of abrasive grains are abrasive grains having different compositions with regard to each other. For example, the body of the shaped abrasive particle can be formed such that it includes at least two different types of abrasive grains, wherein the two different types of abrasive grains can be nitrides, oxides, carbides, borides, oxynitrides, oxyborides, diamond, and a combination thereof.

[00131] In accordance with an embodiment, the shaped abrasive particle 300 can have an average particle size, as measured by the largest dimension measurable on the body 301, of at least about 100 microns. In fact, the shaped abrasive particle 100 can have an average particle size of at least about 150 microns, such as at least about 200 microns, at least about 300 microns, at least about 400 microns, at least about 500 microns, at least about 600 microns, at least about 700 microns, at least about 800 microns, or even at least about 900 microns. Still, the shaped abrasive particle 300 can have an average particle size that is not greater than about 5 mm, such as not greater than about 3 mm, not greater than about 2 mm, or even not greater than about 1.5 mm. It will be appreciated that the shaped abrasive particle 300 can have an average particle size within a range between any of the minimum and maximum values noted above.

[00132] The shaped abrasive particles of the embodiments herein can have a percent flashing that may facilitate improved performance. Notably, the flashing defines an area of the particle as viewed along one side, such as illustrated in FIG. 4, wherein the flashing extends from a side surface of the body of the shaped abrasive particle within the boxes 402 and 403. The flashing can represent tapered regions proximate to the upper surface and bottom surface of the body. In an embodiment, at least one of a first side surface and a second side surface of the body can taper relative to a vertical axis that extends in a direction of a height of the body. The flashing can be measured as the percentage of area of the body along the side surface contained within a box extending between an innermost point of the side surface (e.g., 421) and an outermost point (e.g., 422) on the side surface of the body. In one particular instance, the body can have a particular content of flashing, which can be the percentage of area of the body contained within the boxes 402 and 403 compared to the total area of the body contained within boxes 402, 403, and 404. According to one embodiment, the percent flashing (f) of the body can be at least about 10%. In another embodiment, the percent flashing can be greater, such as at least about 12%, such as at least about 14%, at least about 16%, at least about 18%, or even at least about 20%. Still, in a non-limiting embodiment, the percent flashing of the body can be controlled and may be not greater than about 45%, such as not greater than about 40%, or even not greater than about 36%. It will be appreciated that the percent flashing of the body can be within a range between any of the above minimum and maximum percentages. Moreover, it will be appreciated that the above flashing percentages can be representative of an average flashing percentage or a median flashing percentage for a batch of shaped abrasive particles. The percent flashing also can be measured by mounting the shaped abrasive particle on its side and viewing the body at the side to generate a black and white image. A suitable program for such includes ImageJ software. The percentage flashing can be calculated by determining the area of the body in the boxes 402 and 403 compared to the total area of the body as viewed at the side, including the area in the center 404 and within the boxes. Such a procedure can be completed for a suitable sampling of particles to generate average, median, and/or and standard deviation values.

[00133] A batch of shaped abrasive particles according to embodiments herein may exhibit improved dimensional uniformity as measured by the standard deviation of a dimensional characteristic from a suitable sample size. According to one embodiment, the shaped abrasive particles can have a flashing variation (Vf), which can be calculated as the standard deviation of flashing percentage (f) for a suitable sample size of particles from a batch. According to one embodiment, the flashing variation can be not greater than about 5.5%, such as not greater than about 5.3%, not greater than about 5%, or not greater than about 4.8%, not greater than about 4.6%, or even not greater than about 4.4%. In one non-limiting embodiment, the flashing variation (Vf) can be at least about 0.1%. It will be appreciated that the flashing variation can be within a range between any of the minimum and maximum percentages noted above.

[00134] The shaped abrasive particles of the embodiments herein can have a height (hi) and flashing multiplier value (hiF) of at least 4000, wherein hiF = (hi)(f), an "hi" represents a minimum interior height of the body as described above and "f" represents the percent flashing. In one particular instance, the height and flashing multiplier value (hiF) of the body can be greater than at least about 4000 micron%, such as at least about 4500 micron%, at least about 5000 micron%, at least about 6000 micron%, at least about 7000 micron%, or even at least about 8000 micron%. Still, in one non-limiting embodiment, the height and flashing multiplier value can be not greater than about 45000 micron%, such as not greater than about 30000 micron%, not greater than about 25000 micron%, not greater than about 20000 micron%, or even not greater than about 18000 micron%. It will be appreciated that the height and flashing multiplier value of the body can be within a range between any of the above minimum and maximum values. Moreover, it will be appreciated that the above multiplier value can be representative of a median multiplier value (MhiF) for a batch of shaped abrasive particles.

[00135] The shaped abrasive particles of the embodiments herein can have a dishing (d) and flashing (F) multiplier value (dF) as calculated by the equation dF = (d)(F), wherein dF is not greater than about 90%, "d" represents the dishing value, and "F" represents the percentage flashing of the body. In one particular instance, the dishing (d) and flashing (F) multiplier value (dF) of the body can be not greater than about 70 %, such as not

greater than about 60 %, not greater than about 55 %, not greater than about 48 %, not greater than about 46 %. Still, in one non-limiting embodiment, the dishing (d) and flashing (F) multiplier value (dF) can be at least about 10 %, such as at least about 15 %, at least about 20 %, at least about 22 %, at least about 24 %, or even at least about 26 %. It will be appreciated that the dishing (d) and flashing (F) multiplier value (dF) of the body can be within a range between any of the above minimum and maximum values. Moreover, it will be appreciated that the above multiplier value can be representative of a median multiplier value (MdF) for a batch of shaped abrasive particles.

[00136] The shaped abrasive particles of the embodiments herein can have a height and dishing ratio (hi/d) as calculated by the equation hi/d = (hi)/(d), wherein hi/d is not greater than about 1000 microns, "hi" represents a minimum interior height as described above, and "d" represents the dishing of the body. In one particular instance, the ratio (hi/d) of the body can be not greater than about 900 microns, not greater than about 800 microns, not greater than about 700 microns, or even not greater than about 650 microns. Still, in one non-limiting embodiment, the ratio (hi/d), can be at least about 10 microns, such as at least about 50 microns, at least about 100 microns, at least about 150 microns, at least about 200 microns, at least about 250 microns, or even at least about 275 microns. It will be appreciated that the ratio (hi/d) of the body can be within a range between any of the above minimum and maximum values. Moreover, it will be appreciated that the above height and dishing ratio can be representative of a median height and dishing ratio (Mhi/d) for a batch of shaped abrasive particles.

The Second Type of Abrasive Particle

[00137] The blend of abrasive particles also can include a second type of abrasive particle different from the first type of abrasive particle. The second type of abrasive particle can include various shapes, structures, or configurations. For example, the second type of abrasive particle can include a random shape. In an embodiment, the second type of abrasive particle can include a crushed abrasive particle. In another embodiment, the second type of abrasive particle can include an unagglomerated particle, such as an unagglomerated particle that is essentially free of a binder, or a polycrystalline

material, such as that second type of abrasive particle consists essentially of a polycrystalline material.

[00138] The second type of abrasive particle also can include various compositions or materials. For example, the second type of abrasive particle can include one or more elemental components selected from the group of zirconium, iron, silicon, titanium, silicon carbide, alumina and the like. In particular instances, the second type of abrasive particle can include an oxide-based material, which may include any one or more of a combination of elemental components noted above. In one embodiment, the second type of abrasive particle can include alumina, and more particularly, may be an alumina-based material having a majority content of alumina. Alternatively, the second type of abrasive particle may include zirconia, and be a zirconia-based material having a majority content of zirconia.

[00139] The elemental component may be present within the second type of abrasive particle in a particular amount, including but not limited to, an amount of at least about 1 wt% of, at least about 3 wt%, at least about 5 wt%, at least about 8 wt%, at least about 10 wt%, at least about 15 wt%, at least about 20 wt%, at least about 25 wt%, at least about 30 wt%, at least about 35 wt%, at least about 40 wt%, at least about 45 wt%, at least about 50 wt%, at least about 55 wt%, at least about 60 wt%, at least about 65 wt%, at least about 70 wt%, at least about 75 wt%, at least about 80 wt%, at least about 85 wt%, at least about 90 wt%, or at least about 95 wt%, based on the total weight of the second type of abrasive particle. In another embodiment, the second type of abrasive particle can include not greater than about 95 wt% of one elemental component, such as, not greater than about 90 wt%, not greater than about 85 wt%, not greater than about 80 wt%, not greater than about 75 wt%, not greater than about 70 wt%, not greater than about 65 wt%, not greater than about 60 wt%, not greater than about 55 wt%, not greater than about 50 wt%, not greater than about 45 wt%, not greater than about 40 wt%, not greater than about 35 wt%, not greater than about 30 wt%, not greater than about 25 wt%, not greater than about 20 wt%, not greater than about 15 wt%, not greater than about 10 wt%, or not greater than about 5 wt% of an elemental component, based on the total weight of the second type of abrasive particle. The second type of abrasive particle can include a

content of any one of the elemental components within a range between any of the above minimum and maximum percentages.

[00140] Still, in more particular instances, certain elemental components can be present in a minority content within an alumina-based composition. For example, the second type of abrasive particle can include an alumina-based material having a minority content of at least one other oxide material, which can include any metal oxide, and more particularly, may include an oxide including at least one elemental component. The second type of abrasive particle can also include other materials, including but not limited to, alumina, silica, ceria, baria, at least one transition metal element, at least one rare earth element, or a rare-earth oxide compound, or a combination thereof. In particular instances, the second type of abrasive particle may include a fused material, such as fused alumina. Other suitable types of materials for use as the second type of abrasive particle may include materials such as bauxite, black alumina, black fused alumina, silicon carbide, garnet, quartz, magnetite, pumice, feldspar, olivine, staurolite, flint, almandine, and a combination thereof.

[00141] Where the second type of abrasive particle includes an agglomerated particle, the agglomerated particle can include discrete abrasive particles of polycrystalline material held together by a binder material. The binder material can be inorganic, organic, or a combination of inorganic and organic material. In an embodiment, the binder material can be inorganic and can include a material selected from the group consisting of metal, ceramic, vitreous, and a combination thereof. In another embodiment, the binder material can be organic and can include a material selected from the group consisting of a thermoplastic, thermoset, resin, and a combination thereof. For example, the organic material can include one or more organic resins, such as phenolic resin, boron-modified resin, nano-particle-modified resin, urea-formaldehyde resin, acrylic resin, epoxy resin, polybenzoxazine, polyester resin, isocyanurate resin, melamine-formaldehyde resin, polyimide resin, other suitable thermosetting or thermoplastic resins, or any combination thereof.

The Bond Material

[00142] The abrasive article of the present invention, as well as the methods of making and using the abrasive article, can include various bond materials and precursor bond materials. In specific implementations of the present invention, at least one of the bond material and the precursor bond material is an organic material or bond, also referred to as a "polymeric" or "resin" bond, typically obtained by curing a bonding material. An example of an organic bond material that can be employed to fabricate bonded abrasive articles includes one or more phenolic resins. Such resins can be obtained by polymerizing phenols with aldehydes, in particular, formaldehyde, paraformaldehyde or furfural. In addition to phenols, cresols, xylenols and substituted phenols can be employed. Comparable formaldehyde-free resins also can be utilized. Examples of other suitable organic bond materials include epoxy resins, polyester resins, polyurethanes, polyester, rubber, polyimide, polybenzimidazole, aromatic polyamide, modified phenolic resins (such as: epoxy modified and rubber modified resins, or phenolic resin blended with plasticizers etc.), and so forth, as well as mixtures thereof. Specific, non-limiting examples of resins that can be used include the following: the resins sold by Dynea Oy, Finland, under the trade name Prefere and available under the catalog/product numbers 8522G, 8528G, 8680G, and 8723G; the resins sold by Hexion Specialty Chemicals, OH, under the trade name Rutaphen® and available under the catalog/product numbers 9507P, 8686SP, and SP223; and the resins sold by Sumitomo, formerly Durez Corporation, TX, under the following catalog/product numbers: 29344, 29346, and 29722. In an example, the bond material comprises a dry resin material.

[00143] Among phenolic resins, resoles generally are obtained by a one step reaction between aqueous formaldehyde and phenol in the presence of an alkaline catalyst. Novolac resins, also known as two-stage phenolic resins generally are produced under acidic conditions and during milling process blended with a cross-linking agent, such as hexamethylenetetramine (often also referred to as "hexa"). An exemplary phenolic resin includes resole and novolac. Resole phenolic resins can be alkaline catalyzed and have a ratio of formaldehyde to phenol of greater than or equal to one, such as from 1:1 to 3:1. Novolac phenolic resins can be acid catalyzed and have a ratio of formaldehyde to phenol of less than one, such as 0.5:1 to 0.8:1.

[00144] The bond material can contain more than one phenolic resin, e.g., at least one resole and at least novolac-type phenolic resin. In many cases, at least one phenol- based resin is in liquid form. Suitable combinations of phenolic resins are described, for example, in U.S. Pat. No. 4,918,116 to Gardziella, et al., the entire contents of which are incorporated herein by reference.

[00145] An epoxy resin can include an aromatic epoxy or an aliphatic epoxy. Aromatic epoxies components include one or more epoxy groups and one or more aromatic rings. An example aromatic epoxy includes epoxy derived from a polyphenol, e.g., from bisphenols, such as bisphenol A (4,4'-isopropylidenediphenol), bisphenol F (bis[4-hydroxyphenyl]methane), bisphenol S (4,4'-sulfonyldiphenol), 4,4'-cyclohexylidenebisphenol, 4,4'-biphenol, 4,4'-(9-fluorenylidene)diphenol, or any combination thereof. The bisphenol can be alkoxylated (e.g., ethoxylated or propoxylated) or halogenated (e.g., brominated). Examples of bisphenol epoxies include bisphenol diglycidyl ethers, such as diglycidyl ether of Bisphenol A or Bisphenol F. A further example of an aromatic epoxy includes triphenylolmethane triglycidyl ether, 1,1,1-tris(p-hydroxyphenyl)ethane triglycidyl ether, or an aromatic epoxy derived from a monophenol, e.g., from resorcinol (for example, resorcin diglycidyl ether) or hydroquinone (for example, hydroquinone diglycidyl ether). Another example is nonylphenyl glycidyl ether. In addition, an example of an aromatic epoxy includes epoxy novolac, for example, phenol epoxy novolac and cresol epoxy novolac. Aliphatic epoxy components have one or more epoxy groups and are free of aromatic rings. The external phase can include one or more aliphatic epoxies. An example of an aliphatic epoxy includes glycidyl ether of C2-C30 alkyl; 1,2 epoxy of C3-C30 alkyl; mono or multiglycidyl ether of an aliphatic alcohol or polyol such as 1,4-butanediol, neopentyl glycol, cyclohexane dimethanol, dibromo neopentyl glycol, trimethylol propane, polytetramethylene oxide, polyethylene oxide, polypropylene oxide, glycerol, and alkoxylated aliphatic alcohols; or polyols. In one embodiment, the aliphatic epoxy includes one or more cycloaliphatic ring structures. For example, the aliphatic epoxy can have one or more cyclohexene oxide structures, for example, two cyclohexene oxide structures.

[00146] An example of an aliphatic epoxy comprising a ring structure includes hydrogenated bisphenol A diglycidyl ether, hydrogenated bisphenol F diglycidyl ether, hydrogenated bisphenol S diglycidyl ether, bis(4-hydroxycyclohexyl)methane diglycidyl ether, 2,2-bis(4-hydroxycyclohexyl)propane diglycidyl ether, 3,4-epoxycyclohexylmethyl-3,4-epoxycyclohexanecarboxylate, 3,4-epoxy-6-methylcyclohexylmethyl-3,4-epoxy-6-methylcyclohexanecarboxylate, di(3,4-epoxycyclohexylmethyl)hexanedioate, di(3,4-epoxy-6methylcyclohexylmethyl) hexanedioate, ethylenebis(3,4-epoxycyclohexanecarboxylate), ethanedioldi(3,4-epoxycyclohexylmethyl) ether, or 2-(3,4-epoxycyclohexyl-5,5-spiro-3,4-epoxy)cyclohexane-1,3-dioxane.

[00147] An exemplary multifunctional acrylic can include trimethylolpropane triacrylate, glycerol triacrylate, pentaerythritol triacrylate, methacrylate, dipentaerythritol pentaacrylate, sorbitol triacrylate, sorbital hexacrylate, or any combination thereof. In another example, an acrylic polymer can be formed from a monomer having an alkyl group having from 1-4 carbon atoms, a glycidyl group or a hydroxyalkyl group having from 1-4 carbon atoms. Representative acrylic polymers include polymethyl methacrylate, polyethyl methacrylate, polybutyl methacrylate, polyglycidyl methacrylate, polyhydroxyethyl methacrylate, polymethyl acrylate, polyethyl acrylate, polybutyl acrylate, polyglycidyl acrylate, polyhydroxyethyl acrylate and mixtures thereof.

The Body

[00148] The body of the abrasive article of the present invention can include, in addition to the blend of abrasive particles and the bond material, any other suitable components such as solvents, plasticizers, crosslinkers, chain transfer agents, stabilizers, dispersants, curing agents, reaction mediators, a processing aid (e.g., antistatic agents or metal oxides, such as lime, zinc oxide, magnesium oxide, mixtures thereof and so forth), a lubricant (e.g., e.g., stearic acid and glycerol monostearate, graphite, carbon, molybdenum disulfide, wax beads, calcium carbonate, calcium fluoride and mixtures thereof), and agents for influencing the fluidity of the dispersion. For example, the body can also include one or more chain transfer agents selected from the group consisting of polyol,

polyamine, linear or branched polyglycol ether, polyester and polylactone. Such materials may be considered fillers, as discussed herein, or other additives distinct from the specific formulation of fillers.

[00149] Curing or cross-linking agents that can be utilized depend on the bond material selected. For curing phenol novolac resins, for instance, a typical curing agent is hexa. Other amines, e.g., ethylene diamine; ethylene triamine; methyl amines and precursors of curing agents, e.g., ammonium hydroxide which reacts with formaldehyde to form hexa, also can be employed. Suitable amounts of curing agent can be in the range, for example, of from about 5 to about 20 parts by weight of curing agent per hundred parts of total novolac resin.

[00150] Effective amounts of the curing agent that can be employed usually are about 5 to about 20 parts (by weight) of curing agent per 100 parts of total novolac resin. Those of ordinary skill in the area of resin-bound abrasive articles will be able to adjust this level, based on various factors, e.g., the particular types of resins used, the degree of cure needed, and the desired final properties for the articles: strength, hardness, and grinding performance. In the preparation of abrasive wheels, a preferred level of curing agent is about 8 parts to about 15 parts by weight.

[00151] The body of the abrasive articles as described herein can include various proportions of bond material. For example, the body can include at least 5 vol% of the bond material, based on the total volume of the body, such as at least about 10 vol%, at least about 15 vol%, at least about 20 vol%, at least about 25 vol%, at least about 30 vol%, at least about 35 vol%, at least about 40 vol%, at least about 45 vol%, at least about 50 vol%, at least about 55 vol%, at least about 60 vol%, at least about 65 vol%, at least about 70 vol%, at least about 75 vol%, at least about 80 vol%, or at least about 90 vol%. The body also can include not greater than about 90 vol% for the total volume of the body, not greater than about 85 vol%, not greater than about 80 vol%, not greater than about 75 vol%, not greater than about 70 vol%, not greater than about 65 vol%, not greater than about 60 vol%, not greater than about 55 vol%, not greater than about 50 vol%, not greater than about 45 vol%, not greater than about 40 vol%, not greater than

about 35 vol%, not greater than about 30 vol%, not greater than about 25 vol%, not greater than about 20 vol%, not greater than about 15 vol%, not greater than about 10 vol%, or not greater than about 5 vol%. The body can include a content of bond material within a range between any of the minimum and maximum percentages noted above.

[00152] The body of the abrasive articles as described herein also can include various proportions of the blend of abrasive particles. For example, the body can include at least 5 vol% of the blend of abrasive particles, based on the total volume of the body, such as at least about 10 vol%, at least about 15 vol%, at least about 20 vol%, at least about 25 vol%, at least about 30 vol%, at least about 35 vol%, at least about 40 vol%, at least about 45 vol%, at least about 50 vol%, at least about 55 vol%, at least about 60 vol%, at least about 65 vol%, at least about 70 vol%, at least about 75 vol%, at least about 80 vol%, or at least about 90 vol%. The body also can include not greater than about 90 vol% for the total volume of the body, not greater than about 85 vol%, not greater than about 80 vol%, not greater than about 75 vol%, not greater than about 70 vol%, not greater than about 65 vol%, not greater than about 60 vol%, not greater than about 55 vol%, not greater than about 50 vol%, not greater than about 45 vol%, not greater than about 40 vol%, not greater than about 35 vol%, not greater than about 30 vol%, not greater than about 25 vol%, not greater than about 20 vol%, not greater than about 15 vol%, not greater than about 10 vol%, or not greater than about 5 vol %. The body can include a content of bond material within a range between any of the minimum and maximum percentages noted above.

[00153] The abrasive articles as described herein, including thin wheels with or without reinforcement, can be fabricated to have a body with a desired porosity. The porosity can be set to provide a desired wheel performance, including parameters such as wheel hardness, strength, and initial stiffness, as well as chip clearance and swarf removal. Porosity can be uniformly or non-uniformly distributed throughout the body of the wheel and can be intrinsic porosity, obtained by the arrangement of particles within the bond material, shape of the abrasive particles and/or bond precursors being utilized, pressing conditions and so forth, or can be generated by the use of pore inducers. Both types of porosity can be present.

[00154] The porosity can be closed and/or interconnected (open). In "closed" type porosity void pores or cells generally do not communicate with one another. In contrast, "open" porosity presents pores that are interconnected to one another. Examples of techniques that can be used for inducing closed and interconnected porosities are described in U.S. Pat. Nos. 5,203,886, 5,221,294, 5,429,648, 5,738,696 and 5,738,697, 6,685,755 and 6,755,729, each of which is herein incorporated by reference in its entirety.

[00155] Finished bonded abrasive articles may contain porosity within the range of from about 0 vol % to about 90 vol % (based on the total volume of the body). In some implementations, the porosity of abrasive wheels described herein can be at least 5 vol % for the total volume of the body, at least about 10 vol%, at least about 15 vol%, at least about 20 vol%, at least about 25 vol%, at least about 30 vol%, at least about 35 vol%, at least about 40 vol%, at least about 45 vol%, at least about 50 vol%, at least about 55 vol%, at least about 60 vol%, at least about 65 vol%, at least about 70 vol%, at least about 75 vol%, at least about 80 vol%, or at least about 90 vol%. In some implementations, the porosity of abrasive wheels described herein can be not greater than about 90 vol% for the total volume of the body, not greater than about 85 vol%, not greater than about 80 vol%, not greater than about 75 vol%, not greater than about 70 vol%, not greater than about 65 vol%, not greater than about 60 vol%, not greater than about 55 vol%, not greater than about 50 vol%, not greater than about 45 vol%, not greater than about 40 vol%, not greater than about 35 vol%, not greater than about 30 vol%, not greater than about 25 vol%, not greater than about 20 vol%, not greater than about 15 vol%, not greater than about 10 vol%, or not greater than about 5 vol %. The body can include a content of porosity within a range between any of the minimum and maximum percentages noted above.

[00156] EXAMPLE

[00157] Example 1

[00158] An abrasive article in accordance with embodiments herein is prepared and compared to conventional thin wheel abrasive articles incorporating shaped abrasive particles according to a material removal test.

[00159] The exemplary abrasive article according to an embodiment (Sample 1) is a Type 27 wheel with the following overall dimensions:

[00160] Diameter/Thickness/Height: 125 mm/6.4mm/22.23mm

[00161] Wheel Weight: 188 g

[00162] Wheel Thickness: 6.7 mm

[00163] Sample 1 includes the following layers: a blotter (of 124mm by 23mm), a fiberglass reinforcement (of 123.5mm by 23mm), 85 g of a fine back abrasive layer, a second fiberglass reinforcement (of 117mm by 23mm), 87 g of a grinding abrasive layer, a third fiberglass reinforcement (of 123.5mm by 23mm), and a metal ring (of 35mm by 6.4mm by 22.35mm).

[00164] The fine back abrasive layer includes the components as provided in Table 1, including the weight percent of each component based on the total weight of the mixture used to form the fine back abrasive layer.

Table 1

Abrasive Mix FB	***w/w, %***
Brown Fused Alundum #36	38.19
Brown Fused Alundum #46	38.19
Liquid + powder resins	16.60
PAF	6.42
Lime	0.17
Carbon Black	0.03

[00165] The grinding abrasive layer includes the components as provided in Table 2, including the weight percent of each component based on the total weight of the mixture used to form the grinding abrasive layer.

Table 2

Abrasive Mix GL	***w/w, %***
Shaped Abrasive Particles	69.88
Liquid + powder resin	14.30
Pyrox	9.63
PAF	5.70
Lime	0.14

[00166] The grinding abrasive layer includes shaped abrasive particles as the first type of particle, liquid and powder resin as the bond material, and each of a sulfide ("pyrox"), a fluoride ("PAF"), and lime as fillers in the layer.

[00167] A green body including these abrasive layers and the reinforcements is pre-heated to an initial temperature for a suitable time period. Then the green body is heated for approximately 26 hours. A final cure temperature of approximately 185ºC is utilized. Once the bake cycle is completed, the abrasive article is air-cooled.

[00168] The conventional thin wheel abrasive article (Sample C1) incorporating shaped abrasive particles is also a Type 27 wheel and includes the following overall dimensions:

[00169] Diameter/Thickness/Height: 125 mm/6mm/22.23mm

[00170] Wheel Weight: 187 g

[00171] Wheel Thickness: 6.8 mm

[00172] The conventional thin wheel abrasive article includes the following layers: a blotter (of 124mm by 23mm), a fiberglass reinforcement (of 124mm by 24mm), 85 g of a first grinding layer, a second fiberglass reinforcement (of 124mm by 24mm), 86 g of another grinding layer with the same composition as the first grinding layer, a third fiberglass reinforcement (of 80mm by 24mm), and a metal ring.

[00173] The grinding layers of Sample C1 include the components as provided in Table 3, including the weight percent of each component based on the total weight of the mixture used to form the abrasive grinding layer.

Table 3

Abrasive Mix GL	***w/w, %***
Shaped Abrasive Particles	81.63
Liquid + powder resins	12.29
Fillers	6.08

[00174] Notably, Sample C1 includes a greater quantity of abrasive particles (e.g., the shaped abrasive particles) and a lower quantity of bond material (e.g, the liquid and powder resins) than the abrasive article Sample 1 made in accordance with embodiments disclosed herein.

[00175] The two wheels were compared according to a material removal test. Sample 1 exhibited comparable MRR relative to Sample C1 for the material removal test. However, Sample 1 exhibited remarkably and unexpectedly improved useable life. In particular, Sample 1 has a useable life of at least approximately 1.8 times the useable life of Sample C1. The abrasive article as described herein exhibited an improvement in life although it includes less abrasive particles and more bond material than the conventional thin wheel.

[00176] This improvement in life of the abrasive article while maintaining equal or better material removal rates represents a departure from state of the art abrasive articles that include shaped abrasive particles. Namely, and without wishing to be tied to any particular theories, it is thought that at least the combination of the blend of abrasive particles within the body as disclosed herein and the process by which this abrasive article is made facilitates the formation of abrasive articles, namely thin wheels with or without reinforcement, that have improved performance, and notably, equal or improved MRR and improved life span over conventional abrasive articles.

[00177] It is also thought that the abrasive article made in accordance with embodiments described herein could exhibit even further grinding performance (e.g., even greater improvements in life and better MRR) using the blend of abrasive particles as described

above in conjunction with adjustments to one or more process variables, including but not limited to: curing temperature, content of bond material, including a greater amount of resin in the bond material, content and type of fillers in the body, less porosity in the body, coarser grit size in at least one of the first and second types of abrasive particles, a higher ratio of abrasive particles to bond material, including a ratio based on either grit size of the abrasive particles or total abrasive particle volume, a different blend of zirconia in the second type of abrasive particle, an alumina blend in one or more of the types of abrasive particles, and a bond material consisting of little to no, or essentially free of, any iron pyrite (FeS_2) material.

[00178] Certain features, for clarity, described herein in the context of separate embodiments, may also be provided in combination in a single embodiment. Conversely, various features that are, for brevity, described in the context of a single embodiment, may also be provided separately or in any subcombination. Further, reference to values stated in ranges includes each and every value within that range.

[00179] Benefits, other advantages, and solutions to problems have been described above with regard to specific embodiments. However, the benefits, advantages, solutions to problems, and any feature(s) that may cause any benefit, advantage, or solution to occur or become more pronounced are not to be construed as a critical, required, or essential feature of any or all the claims.

[00180] The specification and illustrations of the embodiments described herein are intended to provide a general understanding of the structure of the various embodiments. The specification and illustrations are not intended to serve as an exhaustive and comprehensive description of all of the elements and features of apparatus and systems that use the structures or methods described herein. Separate embodiments may also be provided in combination in a single embodiment, and conversely, various features that are, for brevity, described in the context of a single embodiment, may also be provided separately or in any subcombination. Further, reference to values stated in ranges includes each and every value within that range. Many other embodiments may be apparent to skilled artisans only after reading this specification. Other embodiments may

be used and derived from the disclosure, such that a structural substitution, logical substitution, or another change may be made without departing from the scope of the disclosure. Accordingly, the disclosure is to be regarded as illustrative rather than restrictive.

WHAT IS CLAIMED IS:

1. An abrasive article comprising:

a thin wheel tool having a body comprising a blend of abrasive particles contained in a bond material, wherein the blend of abrasive particles comprises a first type of abrasive particle, including a shaped abrasive particle, and a second type of abrasive particle different from the first type of abrasive particle, wherein the second type of abrasive particle comprises at least one of zirconium, iron, silicon, titanium.

2. A method of making an abrasive article comprising:

making a mixture of a precursor bond material and a blend of abrasive particles, wherein the blend comprises a first type of abrasive particle, including a shaped abrasive particle, and a second type of abrasive particle comprising at least one of zirconium, iron, silicon, titanium; and

forming a thin wheel tool having a body comprising the blend of abrasive particles contained in the bond material, wherein forming comprises curing a green body at a cure temperature of at least 150ºC for at least 22 hours to form the body.

3. The abrasive article or the method of any one of the preceding claims, wherein the first type of abrasive particle is different from the second type of abrasive particle by at least one particle characteristic selected from the group consisting of friability, hardness, toughness, density, porosity, composition, average particle size, average grain size, and a combination thereof.

4. The abrasive article or the method of any one of the preceding claims, wherein the blend of abrasive particles comprises a blend of at least about 1 wt% and not greater than about 99 wt% of the first type of abrasive particle, and at least about 1 wt% and not greater than about 99 wt% of the second type of abrasive particle, based on the total weight of the blend of abrasive particles.

5. The abrasive article or the method of any one of the preceding claims, wherein the blend of abrasive particles comprises a content of the first type of abrasive particle of at least about 3 wt%, at least about 5 wt%, at least about 8 wt%, at least about 10 wt%, at

least about 15 wt%, at least about 20 wt%, at least about 25 wt%, at least about 30 wt%, at least about 35 wt%, at least about 40 wt%, at least about 45 wt%, at least about 50 wt%, at least about 55 wt%, at least about 60 wt%, at least about 65 wt%, at least about 70 wt%, at least about 75 wt%, at least about 80 wt%, at least about 85 wt%, at least about 90 wt%, or at least about 95 wt% based on the total weight of the blend of abrasive particles, and wherein the blend of abrasive particles comprises a content of the first type of abrasive particle of not greater than about 95 wt%, not greater than about 90 wt%, not greater than about 85 wt%, not greater than about 80 wt%, not greater than about 75 wt%, not greater than about 70 wt%, not greater than about 65 wt%, not greater than about 60 wt%, not greater than about 55 wt%, not greater than about 50 wt%, not greater than about 45 wt%, not greater than about 40 wt%, not greater than about 35 wt%, not greater than about 30 wt%, not greater than about 25 wt%, not greater than about 20 wt%, not greater than about 15 wt%, not greater than about 10 wt%, or not greater than about 5 wt% based on the total weight of the blend of abrasive particles, and wherein the blend abrasive particles can include a content of the first type of abrasive particle within a range between any of the above minimum and maximum percentages.

6. The abrasive article or the method of any one of the preceding claims, wherein the blend of abrasive particles comprises a content of the second type of abrasive particle of at least about 3 wt%, at least about 5 wt%, at least about 8 wt%, at least about 10 wt%, at least about 15 wt%, at least about 20 wt%, at least about 25 wt%, at least about 30 wt%, at least about 35 wt%, at least about 40 wt%, at least about 45 wt%, at least about 50 wt%, at least about 55 wt%, at least about 60 wt%, at least about 65 wt%, at least about 70 wt%, at least about 75 wt%, at least about 80 wt%, at least about 85 wt%, at least about 90 wt%, or at least about 95 wt% based on the total weight of the blend of abrasive particles, and wherein the blend of abrasive particles comprises a content of the second type of abrasive particle of not greater than about 95 wt%, not greater than about 90 wt%, not greater than about 85 wt%, not greater than about 80 wt%, not greater than about 75 wt%, not greater than about 70 wt%, not greater than about 65 wt%, not greater than about 60 wt%, not greater than about 55 wt%, not greater than about 50 wt%, not greater than about 45 wt%, not greater than about 40 wt%, not greater than about 35 wt%,

not greater than about 30 wt%, not greater than about 25 wt%, not greater than about 20 wt%, not greater than about 15 wt%, not greater than about 10 wt%, or not greater than about 5 wt% based on the total weight of the blend of abrasive particles, and wherein the blend of abrasive particles can include a content of the second type of abrasive particle within a range between any of the above minimum and maximum percentages.

7. The abrasive article or the method of any one of the preceding claims, wherein the first type of abrasive particle comprises a first average particle size (PS_1), wherein the second type of abrasive particle comprises a second average particle size (PS_2), and wherein the first average particle size is at least about 1% greater than the second average particle size based on the equation $[(PS_1-PS_2)/PS_1]x100\%$, at least about 3%, at least about 5%, at least about 8%, at least about 10%, at least about 15%, at least about 20%, at least about 25%, at least about 30%, at least about 35%, at least about 40%, at least about 45%, at least about 50%, at least about 55%, at least about 60%, at least about 65%, at least about 70%, at least about 75%, at least about 80%, at least about 85%, at least about 90%, or at least about 95% greater than the second average particle size, and wherein the first average particle size is not greater than about 95 % of the second average particle size, not greater than about 90%, not greater than about 85%, not greater than about 80%, not greater than about 75%, not greater than about 70%, not greater than about 65%, not greater than about 60%, not greater than about 55%, not greater than about 50%, not greater than about 45%, not greater than about 40%, not greater than about 35%, not greater than about 30%, not greater than about 25%, not greater than about 20%, not greater than about 15%, not greater than about 10%, or not greater than about 5% of the second average particle size, wherein the first average particle size is greater than the second average particle size within a range between any of the above minimum and maximum percentages.

8. The abrasive article or the method of any one of the preceding claims, wherein the second type of abrasive particle comprises a first average particle size (PS_2), wherein the first type of abrasive particle comprises a second average particle size (PS_1), and wherein the second average particle size is at least about 1% greater than the first average particle size based on the equation $[(PS_2-PS_1)/PS_2]x100\%$, at least about 3%, at least

about 5%, at least about 8%, at least about 10%, at least about 15%, at least about 20%, at least about 25%, at least about 30%, at least about 35%, at least about 40%, at least about 45%, at least about 50%, at least about 55%, at least about 60%, at least about 65%, at least about 70%, at least about 75%, at least about 80%, at least about 85%, at least about 90%, or at least about 95% greater than the first average particle size, and wherein the second average particle size is not greater than about 95 % of the first average particle size, not greater than about 90%, not greater than about 85%, not greater than about 80%, not greater than about 75%, not greater than about 70%, not greater than about 65%, not greater than about 60%, not greater than about 55%, not greater than about 50%, not greater than about 45%, not greater than about 40%, not greater than about 35%, not greater than about 30%, not greater than about 25%, not greater than about 20%, not greater than about 15%, not greater than about 10%, or not greater than about 5% of the first average particle size, wherein the second average particle size is greater than the first average particle size within a range between any of the above minimum and maximum percentages.

9. The abrasive article or the method of any one of the preceding claims, wherein the blend of abrasive particles comprises a weighted average density between about 2 g/cm^3 and about 5 g/cm^3.

10. The abrasive article or the method of any one of the preceding claims, wherein the blend of abrasive particles comprises a weighted average Moh's hardness between about 6 and about 10.

11. The abrasive article or the method of any one of the preceding claims, wherein the blend of abrasive particles comprises a weighted average Knoop hardness value between about 1000 and about 8000.

12. The abrasive article or the method of any one of the preceding claims, wherein at least one of the first type of abrasive particle and the second type of abrasive particle is uniformly dispersed throughout the blend of abrasive particles, wherein the first type of abrasive particle is substantially uniformly dispersed throughout the volume of the bond material, wherein the first type of abrasive particle is substantially uniformly

dispersed throughout the volume of the body, wherein the first type of abrasive particle is non-uniformly distributed throughout the bond material, wherein the first type of abrasive particle is non-uniformly distributed throughout the body, wherein the first type of abrasive particle is preferentially distributed at an exterior surface of the body, wherein the first type of abrasive particle comprises a concentration at an exterior surface of the body that is greater than a concentration of the second type of abrasive particle at the surface of the body, wherein the body comprises a first concentration (C_1) of the first type of abrasive particle at an exterior surface and a second concentration (C_2) of the second type of abrasive particle at an exterior surface of the body that is different than the first concentration, wherein the first concentration is greater than the second concentration by at least about 1%, based on the equation $[(C_1-C_2)/C_1]x100\%$, wherein the first concentration is greater than the second concentration by at least about 3%, at least about 5%, at least about 8%, at least about 10%, at least about 15%, at least about 20%, at least about 25%, at least about 30%, at least about 35%, at least about 40%, at least about 45%, at least about 50%, at least about 55%, at least about 60%, at least about 65%, at least about 70%, at least about 75%, at least about 80%, at least about 85%, at least about 90%, or by at least about 95%, wherein the first concentration is greater than the second concentration by not greater than about 95 %, not greater than about 90%, not greater than about 85%, not greater than about 80%, not greater than about 75%, not greater than about 70%, not greater than about 65%, not greater than about 60%, not greater than about 55%, not greater than about 50%, not greater than about 45%, not greater than about 40%, not greater than about 35%, not greater than about 30%, not greater than about 25%, not greater than about 20%, not greater than about 15%, not greater than about 10%, or not greater than about 5%, wherein the first concentration is greater than the second concentration within a range between any of the above minimum and maximum percentages.

13. The abrasive article or the method of any one of the preceding claims, wherein the second type of abrasive particle is substantially uniformly dispersed throughout the volume of the bond material, wherein the second type of abrasive particle is substantially uniformly dispersed throughout the volume of the body, wherein the

second type of abrasive particle is non-uniformly distributed throughout the bond material, wherein the second type of abrasive particle is non-uniformly distributed throughout the body, wherein the second type of abrasive particle is preferentially distributed at an exterior surface of the body, wherein the second type of abrasive particle comprises a concentration at an exterior surface of the body that is greater than a concentration of the first type of abrasive particle at the surface of the body, wherein the body comprises a first concentration (C_1) of the first type of abrasive particle at an exterior surface and a second concentration (C_2) of the second type of abrasive particle at an exterior surface of the body that is different than the first concentration, wherein the second concentration is greater than the first concentration by at least about 1%, based on the equation $[(C_2-C_1)/C_2]x100\%$, wherein the second concentration is greater than the first concentration by at least about 3%, at least about 5%, at least about 8%, at least about 10%, at least about 15%, at least about 20%, at least about 25%, at least about 30%, at least about 35%, at least about 40%, at least about 45%, at least about 50%, at least about 55%, at least about 60%, at least about 65%, at least about 70%, at least about 75%, at least about 80%, at least about 85%, at least about 90%, or by at least about 95%, wherein the second concentration is greater than the first concentration by not greater than about 95 %, not greater than about 90%, not greater than about 85%, not greater than about 80%, not greater than about 75%, not greater than about 70%, not greater than about 65%, not greater than about 60%, not greater than about 55%, not greater than about 50%, not greater than about 45%, not greater than about 40%, not greater than about 35%, not greater than about 30%, not greater than about 25%, not greater than about 20%, not greater than about 15%, not greater than about 10%, or not greater than about 5%, wherein the second concentration is greater than the first concentration within a range between any of the above minimum and maximum percentages.

14. The abrasive article or the method of any one of the preceding claims, wherein the first type of abrasive particle comprises seeded-gel particles, such as seeded sintered sol gel alumina particles, wherein the first type of abrasive particle comprises a material selected from the group consisting of oxides, nitrides, carbides, borides, oxynitrides, oxycarbides, and a combination thereof, wherein the first type of abrasive

particle comprises alumina, wherein the first type of abrasive particle comprises alpha alumina, or wherein the first type of abrasive particle consists essentially of alpha alumina.

15. The abrasive article or the method of any one of the preceding claims, wherein the first type of abrasive particle comprises a shaped abrasive particle, wherein the shaped abrasive particle comprises a two-dimensional polygonal shape as viewed in a plane defined by a length and a width of the shaped abrasive particle, and wherein the shaped abrasive particle includes a shape selected from the group consisting of triangular, quadrilateral, rectangular, trapezoidal, pentagonal, hexagonal, heptagonal, octagonal, or a combination thereof.

16. The abrasive article or the method of any one of the preceding claims, wherein the first type of abrasive particle comprises a shaped abrasive particle, wherein the shaped abrasive particle comprises a two-dimensional shape as viewed in a plane defined by a length and a width of the shaped abrasive particle, and wherein the shaped abrasive particle includes a shape selected from the group consisting of ellipsoids, Greek alphabet characters, Latin alphabet characters, Russian alphabet characters, triangles, pentagons, hexagons, heptagons, octagons, nonagons, decagons, particles or a combination thereof.

17. The abrasive article or the method of any one of the preceding claims, wherein the first type of abrasive particle comprises a body having a length (l), a width (w), and a height (hi), wherein the height (hi) is an interior height of the body and at least about 28% of the width, wherein the height (hi) is at least about 29% of the width, at least about 30%, at least about 33%, and not greater than about 80%, not greater than about 76%, not greater than about 73%, not greater than about 70%, not greater than about 68% of the width, not greater than about 56% of the width, not greater than about 48% of the width, not greater than about 40% of the width.

18. The abrasive article or the method of any one of the preceding claims, wherein the first type of abrasive particle comprises a body having a percent flashing (f) of at least about 10% and not greater than about 45% for a total side area of the body,

wherein the percent flashing is at least about 12%, a least about 14%, at least about 16%, at least about 18%, and not greater than about 40%, not greater than about 36%, not greater than about 32%.

19. The abrasive article or the method of any one of the preceding claims, the first type of abrasive particle comprises a body having a length (l), a width (w), and a height (hi), wherein the interior height (hi) is an interior height of the body and the interior height is at least about 400 microns, at least about 450 microns, at least about 475 microns, at least about 500 microns, and not greater than about 3 mm, not greater than about 2 mm, not greater than about 1.5 mm, not greater than about 1 mm, not greater than about 800 microns.

20. The abrasive article or the method of any one of the preceding claims, wherein the first type of abrasive particle comprises a body, wherein the width≥length, wherein the length≥height, wherein the width≥height, wherein the width is at least about 600 microns, at least about 700 microns, at least about 800 microns, at least about 900 microns, and not greater than about 4 mm, not greater than about 3 mm, not greater than about 2.5 mm, not greater than about 2 mm.

21. The abrasive article or the method of any one of the preceding claims, wherein the first type of abrasive particle comprises a body, wherein the body comprises a dishing value (d) of not greater than about 2, not greater than about 1.9, not greater than about 1.8, not greater than about 1.7, not greater than about 1.6, not greater than about 1.5, and at least about 0.9, at least about 1.0.

22. The abrasive article or the method of any one of the preceding claims, wherein the first type of abrasive particle comprises a body, wherein the body comprises a first corner height (hc) at a first end of the body defining a corner between an upper surface, a first side surface, and a second side surface, and a second midpoint height (hm) at a second end of the body opposite the first end defining an edge between the upper surface and a third side surface, wherein the average difference in height between the first corner height and the second midpoint height is at least about 20 microns, at least about

25 microns, at least about 30 microns, at least about 36 microns, at least about 40 microns, at least about 80 microns, at least about 100 microns.

23. The abrasive article or the method of any one of the preceding claims, wherein the first type of abrasive particle comprises a body, wherein the body comprises a bottom surface defining a bottom area (A_b), the body further comprising a cross-sectional midpoint area (A_m) defining an area of a plane perpendicular to the bottom area and extending through a midpoint of the first type of abrasive particle, the body comprising an area ratio of bottom area to midpoint area (A_b/A_m) of not greater than about 6.

24. The abrasive article or the method of any one of the preceding claims, wherein the first type of abrasive particle comprises a body, wherein the body comprises a profile ratio of at least about 0.04, wherein the profile ratio is defined as a ratio between an average difference in height and a profile length [(hc-hm)/(Lmiddle)] wherein the profile ratio is not greater than about 0.3.

25. The abrasive article or the method of any one of the preceding claims, wherein the first type of abrasive particle comprises a body, wherein the body has a rake angle within a range between about 1° and about 80°, wherein the rake angle is as defined as an angle between a bottom surface and one of a first side surface, a second side surface, and a third side surface.

26. The abrasive article or the method of any one of the preceding claims, wherein the first type of abrasive particle comprises a body having a bottom surface and an upper surface, wherein the bottom surface has a greater surface area than the upper surface.

27. The abrasive article or the method of any one of the preceding claims, wherein the first type of abrasive particle comprises a body having a first side surface and a second side surface, wherein the first side surface and second side surface are tapered relative to a vertical axis extending in a direction of a height of the body.

28. The abrasive article or the method of any one of the preceding claims, wherein the first type of abrasive particle comprises a body, wherein the body is essentially free of a binder, wherein the body is essentially free of an organic material, wherein the body comprises a polycrystalline material, wherein the polycrystalline material comprises abrasive grains, wherein the abrasive grains are selected from the group of materials consisting of nitrides, oxides, carbides, borides, oxynitrides, diamond, and a combination thereof, wherein the abrasive grains comprise an oxide selected from the group of oxides consisting of aluminum oxide, zirconium oxide, titanium oxide, yttrium oxide, chromium oxide, strontium oxide, silicon oxide, and a combination thereof, wherein the abrasive grains comprise alumina, wherein the abrasive grains consist essentially of alumina.

29. The abrasive article or the method of any one of the preceding claims, wherein the first type of abrasive particle comprises a body, wherein the average grain size is not greater than about 100 microns, not greater than about 1 micron.

30. The abrasive article or the method of any one of the preceding claims, wherein the first type of abrasive particle comprises a body, wherein the body is a composite comprising at least about 2 different types of abrasive grains.

31. The abrasive article or the method of any one of the preceding claims, wherein the first type of abrasive particle comprises a body, wherein the body comprises an additive, wherein the additive comprise zirconia, wherein the additive is substantially uniformly distributed through the body, wherein the additive is non-uniformly distributed throughout the body, wherein the additive is preferentially distributed at an exterior surface of the body, wherein the body of the first type of abrasive particle comprises a greater content of the additive at an exterior surface than a content of the additive within a central region in the interior of the body spaced away from the exterior surface of the body.

32. The abrasive article or the method of any one of the preceding claims, wherein the first type of abrasive particle comprises a body, wherein the body comprises a normalized height difference ratio defined by the absolute value of the equation [(hc-

hm)/(hi)]of not greater than about 0.3, not greater than about 0.26, not greater than about 0.22, not greater than about 0.19, at least about 0.04, at least about 0.05, at least about 0.06.

33. The abrasive article or the method of any one of the preceding claims, wherein the first type of abrasive particle comprises a body, and wherein the body comprises a height and flashing multiplier value (hiF) of at least about 4000 micron% as calculated by the equation hiF = (h)(f), wherein hiF is at least about 4500 micron%, at least about 5000 micron%, at least about 6000 micron%, at least about 7000 micron%, at least about 8000 micron%, and not greater than about 45000 micron%, not greater than about 30000 micron%, not greater than about 25000 micron%, not greater than about 20000 micron%, not greater than about 18000 micron%.

34. The abrasive article or the method of any one of the preceding claims, wherein the first type of abrasive particle comprises a body, and wherein the body comprises a dishing (d) and flashing (F) multiplier value (dF) as calculated by the equation dF = (d)(F), wherein dF is not greater than about 90%, not greater than about 70%, not greater than about 60%, not greater than about 55%, not greater than about 48%, not greater than about 46%, wherein dF is at least about 10%, at least about 15%, at least about 20%, at least about 22%, at least about 24%, at least about 26%.

35. The abrasive article or the method of any one of the preceding claims, wherein the first type of abrasive particle comprises a body, and wherein the body further comprises an interior height (hi) to dishing ratio (hi/d) as calculated by the equation hi/d = (hi)/(d), wherein hi/d is not greater than about 1000 microns, not greater than about 900 microns, not greater than about 800 microns, not greater than about 700 microns, not greater than about 650 microns, and wherein hi/d is at least about 10 microns, at least about 50 microns, at least about 100 microns, at least about 150 microns, at least about 200 microns, at least about 250 microns, at least about 275 microns.

36. The abrasive article or the method of any one of the preceding claims, wherein the second type of abrasive particle comprises a random shape, wherein the second type of abrasive particle comprises a crushed abrasive particle, wherein the

second type of abrasive particle comprises an unagglomerated particle, wherein the second type of abrasive particle comprises a polycrystalline material, wherein the second type of abrasive particle consists essentially of a polycrystalline material, or wherein the second type of abrasive particle comprises an unagglomerated particle that is essentially free of a binder.

37. The abrasive article or the method of any one of the preceding claims, wherein the second type of abrasive particle comprises an agglomerated particle comprising discrete abrasive particles of polycrystalline material held together by a binder material, wherein the binder material comprises an inorganic material, wherein the inorganic material is selected from the group consisting of metal, ceramic, vitreous, and a combination thereof, wherein the binder material comprises an organic material, wherein the organic material is selected from the group consisting of a thermoplastic, thermoset, resin, and a combination thereof, or wherein the binder comprises a combination of an inorganic material and an organic material.

38. The abrasive article or the method of any one of the preceding claims, wherein the second type of abrasive particle comprises an oxide-based material comprising at least one of zirconium, iron, silicon, titanium, wherein the second type of abrasive particle is a compound including at least two oxide compounds, wherein the second type of abrasive particle further includes at least one material selected from the group consisting of alumina, silica, ceria, baria, and a combination thereof, wherein the second type of abrasive particle comprises at least one transition metal element, wherein the second type of abrasive particle comprises at least one rare earth element, or wherein the second type of abrasive particle comprises a rare-earth oxide compound.

39. The abrasive article or the method of any one of the preceding claims, wherein the second type of abrasive particle comprises at least one elemental component of at least about 1 wt% based on the total weight of the second type of abrasive particle, at least about 3 wt%, at least about 5 wt%, at least about 8 wt%, at least about 10 wt%, at least about 15 wt%, at least about 20 wt%, at least about 25 wt%, at least about 30 wt%, at least about 35 wt%, at least about 40 wt%, at least about 45 wt%, at least about 50

wt%, at least about 55 wt%, at least about 60 wt%, at least about 65 wt%, at least about 70 wt%, at least about 75 wt%, at least about 80 wt%, at least about 85 wt%, at least about 90 wt%, or at least about 95 wt% based on the total weight of the second type of abrasive particle, and wherein the second type of abrasive particle comprises a content of at least one elemental component of not greater than about 95 wt%, not greater than about 90 wt%, not greater than about 85 wt%, not greater than about 80 wt%, not greater than about 75 wt%, not greater than about 70 wt%, not greater than about 65 wt%, not greater than about 60 wt%, not greater than about 55 wt%, not greater than about 50 wt%, not greater than about 45 wt%, not greater than about 40 wt%, not greater than about 35 wt%, not greater than about 30 wt%, not greater than about 25 wt%, not greater than about 20 wt%, not greater than about 15 wt%, not greater than about 10 wt%, or not greater than about 5 wt% based on the total weight of the second type of abrasive particle, and wherein the second type of abrasive particle can include a content of at least one elemental component within a range between any of the above minimum and maximum percentages.

40. The abrasive article or the method of any one of the preceding claims, wherein at least one of the first type of abrasive particle and the second type of abrasive particle comprises a primary aspect ratio of width to length (width:length) of at least about 1.5:1, such as at least about 2:1, at least about 4:1, or even at least about 5:1, wherein at least one of the first type of abrasive particle and the second type of abrasive particle comprises a primary aspect ratio of width to length (width:length) of not greater than about 10:1, such as not greater than 9:1, not greater than about 8:1, or even not greater than about 5:1, wherein at least one of the first type of abrasive particle and the second type of abrasive particle comprises a primary aspect ratio of width to length within a range of between about 1:1 and about 10:1.

41. The abrasive article or the method of any one of the preceding claims, wherein the first type of abrasive particle comprises a secondary aspect ratio of length to height (length:height) of between about 5:1 and about 1:3, such as between about 4:1 and about 1:2, or even between about 3:1 and about 1:2.

42. The abrasive article or the method of any one of the preceding claims, wherein the first type of abrasive particle comprises a tertiary aspect ratio of width to height (width:height) within a range between about 10:1 and about 1.5:1, such as between 8:1 and about 1.5:1, such as between about 6:1 and about 1.5:1, or even between about 4:1 and about 1.5:1.

43. The abrasive article or the method of any one of the preceding claims, wherein the blend of abrasive particles further comprises a third type of abrasive particle, wherein the third type of abrasive particle is different from at least one of the first type of abrasive particle and the second type of abrasive particle by at least one particle characteristic selected from the group consisting of friability, hardness, toughness, density, porosity, composition, average particle size, average grain size, and a combination thereof.

44. The abrasive article or the method of any one of the preceding claims, wherein at least one of the bond material and the precursor bond material comprises an organic material, such as a resin.

45. The abrasive article or the method of any one of the preceding claims, wherein the body comprises at least one of an active filler, an inactive filler, a processing aid, a lubricant, a crosslinking or curing agent, an antistatic agent, or a combination thereof.

46. The abrasive article or the method of any one of the preceding claims, wherein the body comprises at least 5 vol% of the bond material for the total volume of the body, at least about 10 vol%, at least about 15 vol%, at least about 20 vol%, at least about 25 vol%, at least about 30 vol%, at least about 35 vol%, at least about 40 vol%, at least about 45 vol%, at least about 50 vol%, at least about 55 vol%, at least about 60 vol%, at least about 65 vol%, at least about 70 vol%, at least about 75 vol%, at least about 80 vol%, or at least about 90 vol%, and wherein the body comprises a content of bond material of not greater than about 90 vol% for the total volume of the body, not greater than about 85 vol%, not greater than about 80 vol%, not greater than about 75 vol%, not greater than about 70 vol%, not greater than about 65 vol%, not greater than

about 60 vol%, not greater than about 55 vol%, not greater than about 50 vol%, not greater than about 45 vol%, not greater than about 40 vol%, not greater than about 35 vol%, not greater than about 30 vol%, not greater than about 25 vol%, not greater than about 20 vol%, not greater than about 15 vol%, not greater than about 10 vol%, or not greater than about 5 vol%, wherein the body comprises a content of bond material within a range between any of the minimum and maximum percentages noted above.

47. The abrasive article or the method of any one of the preceding claims, wherein the body comprises at least 5 vol% of the blend of abrasive particles for the total volume of the body, at least about 10 vol%, at least about 15 vol%, at least about 20 vol%, at least about 25 vol%, at least about 30 vol%, at least about 35 vol%, at least about 40 vol%, at least about 45 vol%, at least about 50 vol%, at least about 55 vol%, at least about 60 vol%, at least about 65 vol%, at least about 70 vol%, at least about 75 vol%, at least about 80 vol%, or at least about 90 vol%, and wherein the body comprises a content of the blend of abrasive particles of not greater than about 90 vol% for the total volume of the body, not greater than about 85 vol%, not greater than about 80 vol%, not greater than about 75 vol%, not greater than about 70 vol%, not greater than about 65 vol%, not greater than about 60 vol%, not greater than about 55 vol%, not greater than about 50 vol%, not greater than about 45 vol%, not greater than about 40 vol%, not greater than about 35 vol%, not greater than about 30 vol%, not greater than about 25 vol%, not greater than about 20 vol%, not greater than about 15 vol%, not greater than about 10 vol%, or not greater than about 5 vol %, wherein the body comprises a content of bond material within a range between any of the minimum and maximum percentages noted above.

48. The abrasive article or the method of any one of the preceding claims, wherein the body comprises a content of porosity of at least 5 vol% for the total volume of the body, at least about 10 vol%, at least about 15 vol%, at least about 20 vol%, at least about 25 vol%, at least about 30 vol%, at least about 35 vol%, at least about 40 vol%, at least about 45 vol%, at least about 50 vol%, at least about 55 vol%, at least about 60 vol%, at least about 65 vol%, at least about 70 vol%, at least about 75 vol%, at least about 80 vol%, or at least about 90 vol%, and wherein the body comprises a content

of porosity of not greater than about 90 vol% for the total volume of the body, not greater than about 85 vol%, not greater than about 80 vol%, not greater than about 75 vol%, not greater than about 70 vol%, not greater than about 65 vol%, not greater than about 60 vol%, not greater than about 55 vol%, not greater than about 50 vol%, not greater than about 45 vol%, not greater than about 40 vol%, not greater than about 35 vol%, not greater than about 30 vol%, not greater than about 25 vol%, not greater than about 20 vol%, not greater than about 15 vol%, not greater than about 10 vol%, or not greater than about 5 vol %, wherein the body comprises a content of porosity within a range between any of the minimum and maximum percentages noted above.

49. The abrasive article or the method of any one of the preceding claims, wherein the body comprises a thickness of at least about 0.8 mm, at least about 0.9 mm, at least about 1 mm, at least about 1.2 mm, at least about 1.3 mm, at least about 1.5 mm, at least about 1.8 mm, at least about 2 mm, at least about 2.2mm, at least about 2.5 mm, at least about 2.8 mm, at least about 3 mm, at least about 3.2 mm, at least about 3.5 mm, at least about 3.8 mm, at least about 4 mm, at least about 4.2 mm, at least about 4.5 mm, at least about 4.8 mm, at least about 5 mm, and wherein the body comprises a thickness not greater than about 10 mm, such as not greater than about 9 mm, not greater than about 8 mm, not greater than about 7 mm, not greater than about 6 mm, not greater than about 5.8 mm, not greater than about 5.5 mm, not greater than about 5.2 mm, not greater than about 5 mm, not greater than about 4.8 mm, not greater than about 4.5 mm, not greater than about 4.2 mm, not greater than about 4 mm, not greater than about 3.8 mm, not greater than about 3.5 mm, not greater than about 3.2 mm, not greater than about 3 mm, not greater than about 2.8 mm, not greater than about 2.5 mm, not greater than about 2.2 mm, not greater than about 2 mm, wherein the body comprises a thickness within a range between any of the above minimum and maximum values.

50. The abrasive article or the method of any one of the preceding claims, wherein the thin wheel tool comprises a Type 27 wheel.

51. The abrasive article or the method of any one of the preceding claims, wherein the thin wheel tool comprises a ratio between a diameter of the thin wheel tool

and a thickness of the thin wheel tool of at least about 15:1, at least about 20:1, at least about 25:1, at least about 35:1, at least about 50:1, at least about 75:1, at least about 100:1, or at least about 125:1, and wherein the thin wheel tool comprises a ratio between a diameter of the thin wheel tool and a thickness of the thin wheel tool of not greater than about 125:1, not greater than about 100:1, not greater than about 75:1, not greater than about 50:1, not greater than about 35:1, not greater than about 25:1, not greater than about 20:1, or not greater than about 15:1, wherein the thin wheel tool comprises a ratio between a diameter of the thin wheel tool and a thickness of the thin wheel tool within a range between any of the above minimum and maximum values.

52. The method of claim 2, wherein the curing temperature comprises between about 150ºC and 250ºC.

53. The abrasive article or the method of any one of the preceding claims, wherein the thin wheel tool further comprises one or more reinforcements.

54. The abrasive article of the method of claim 53, wherein the thin wheel tool comprises at least one fiberglass web reinforcement.

55. The abrasive article of any one of the preceeding claims, wherein the second type of abrasive particle comprises a fused particle, wherein the second type of abrasive particle comprises fused brown alumina, wherein the second type of abrasive particle consists essentially of brown fused alumina.

56. The abrasive article of any one of the preceeding claims, wherein the first type of abrasive particle is contained in a first abrasive layer and the second type of abrasive particle is contained in a second abrasive layer, wherein the first abrasive layer is distinct from the second abrasive layer, wherein the first abrasive layer is a grinding layer, wherein the first abrasive layer is axially spaced apart from the second abrasive layer within the body, wherein the first abrasive layer is separated from the second abrasive layer by at least one reinforcement layer, wherein the second abrasive layer is a fine back layer.

57. A thin wheel abrasive article comprising:

a body including a first type of abrasive particle and a second type of abrasive particle, and wherein the body comprises an improvement in useable life of at least about 1.2 times, such as at least about 1.3 times, at least about 1.4 times, at least about 1.5 times, at least about 1.6 times, at least about 1.7 times, at least about 1.8 times, at least about 1.9 times, at least about 2 times, as compared to conventional thin wheel abrasive articles incorporating shaped abrasive particles according to a material removal test.

ABSTRACT

The present invention provides an abrasive article. The abrasive article includes a thin wheel tool having a body including a blend of abrasive particles contained in a bond material. The blend of abrasive particles includes a first type of abrasive particle, such as a shaped abrasive particle, and a second type of abrasive particle different from the first type of abrasive particle, wherein the second type of abrasive particle comprises at least one of zirconium, iron, silicon, titanium.

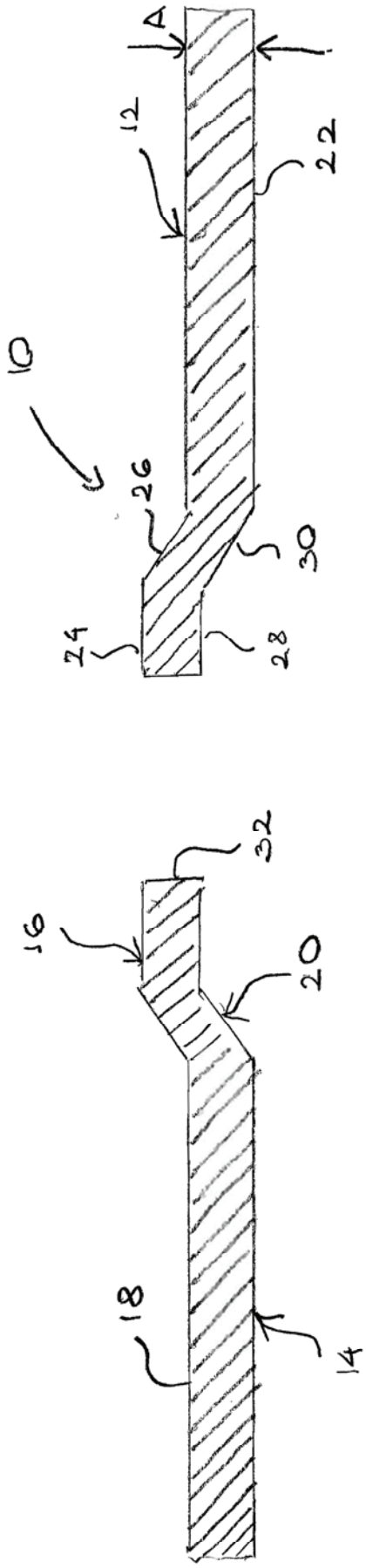

FIG. 1A

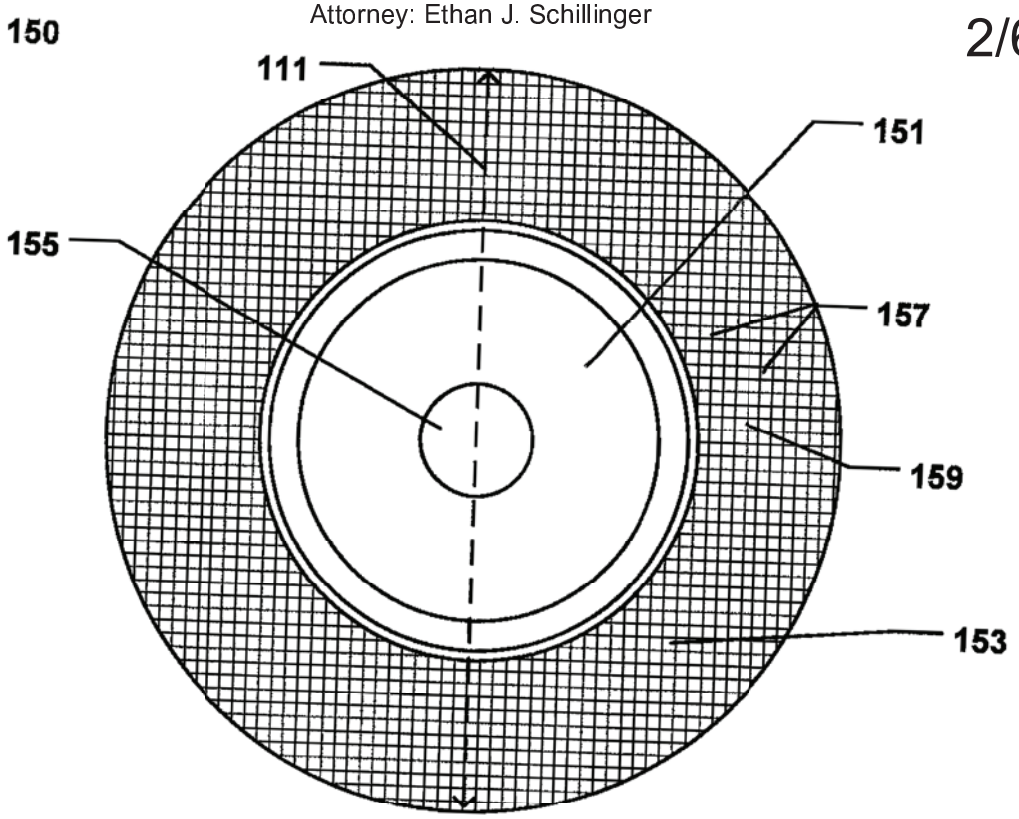

FIG. 1B

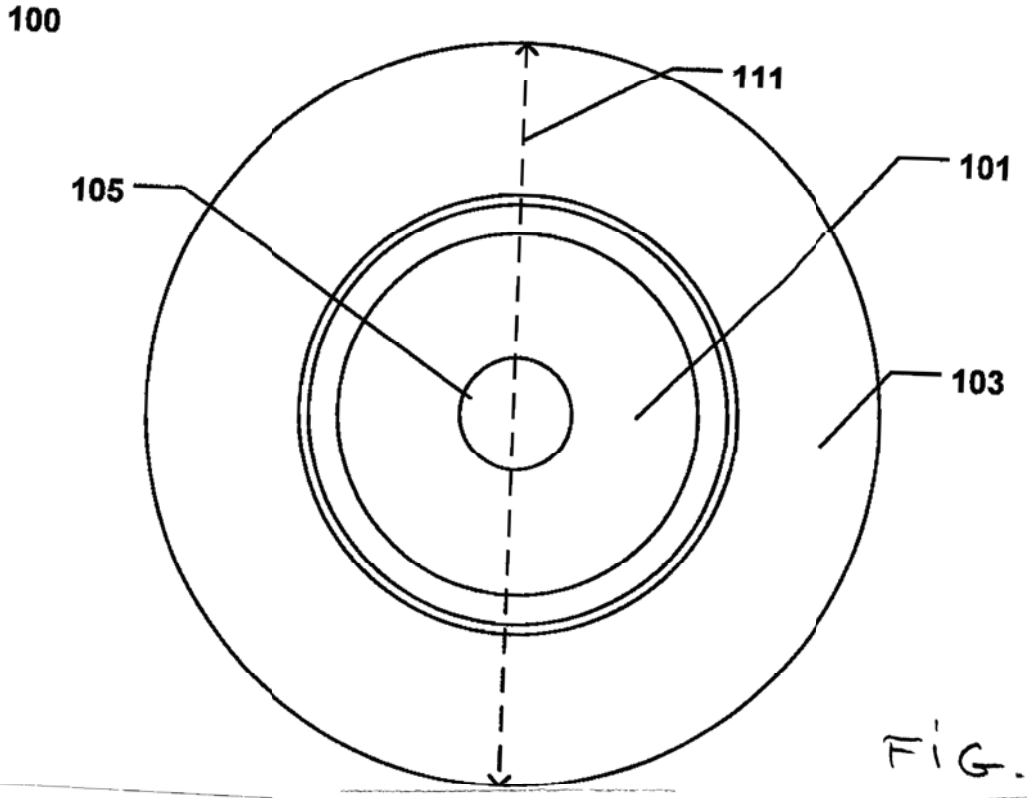

FIG. 1C

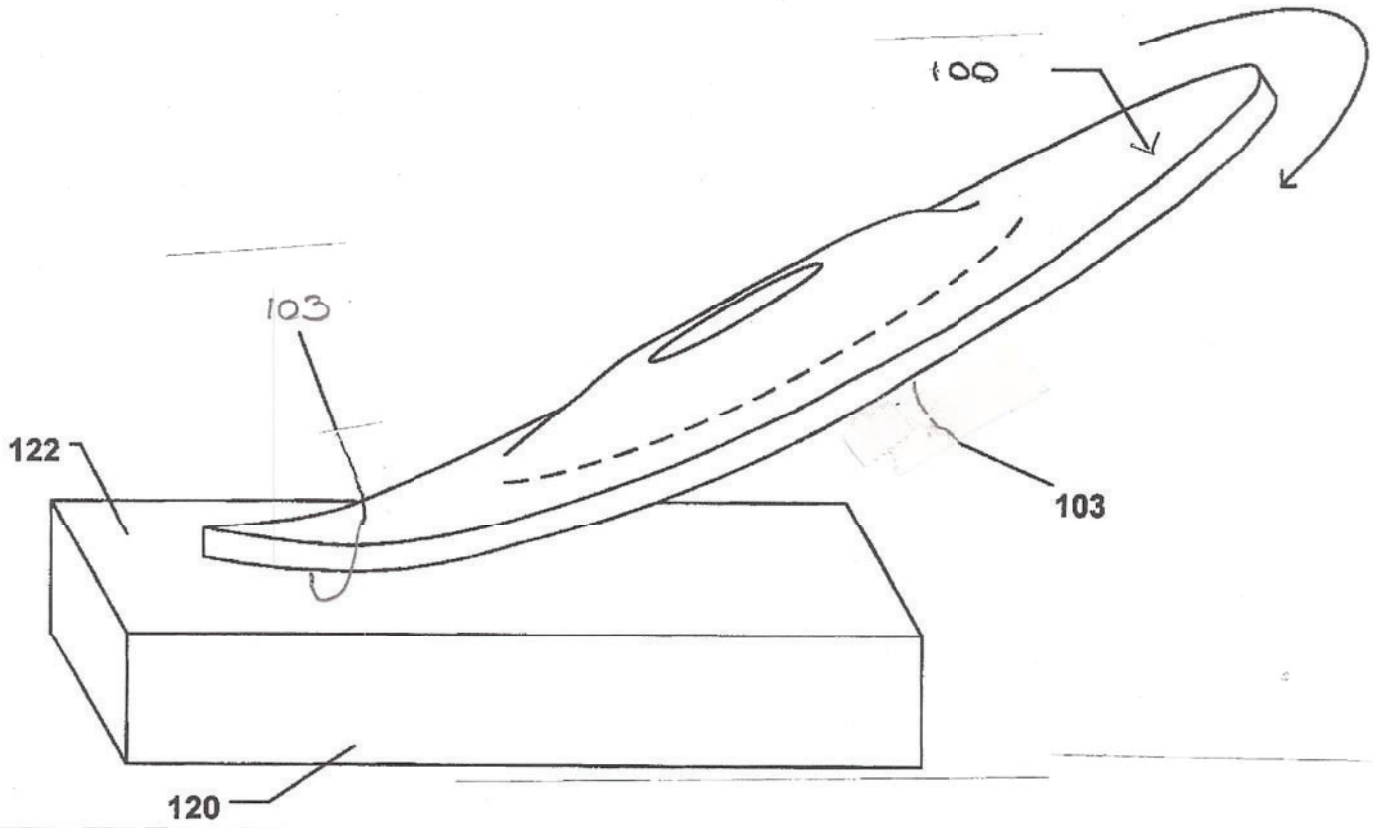

FIG. 1D

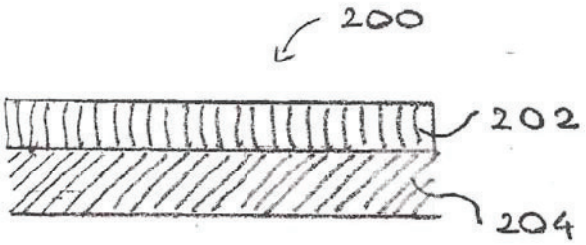

FIG. 2A

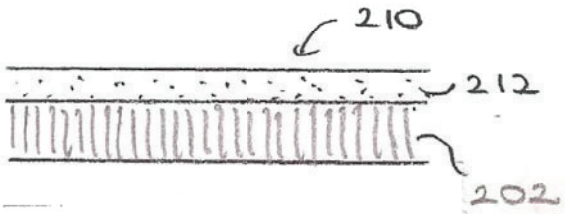

FIG. 2B

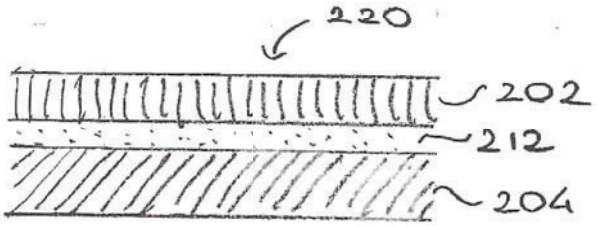

FIG. 2C

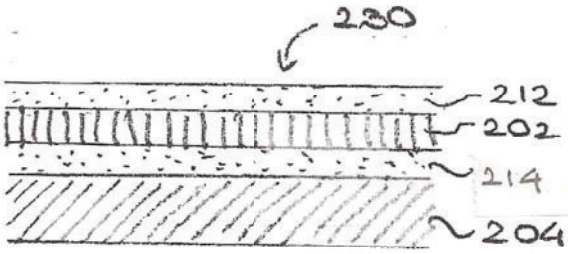

FIG. 2D

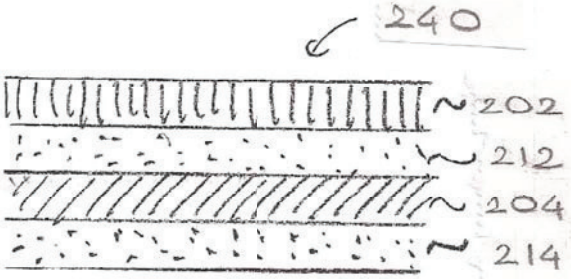

FIG. 2E

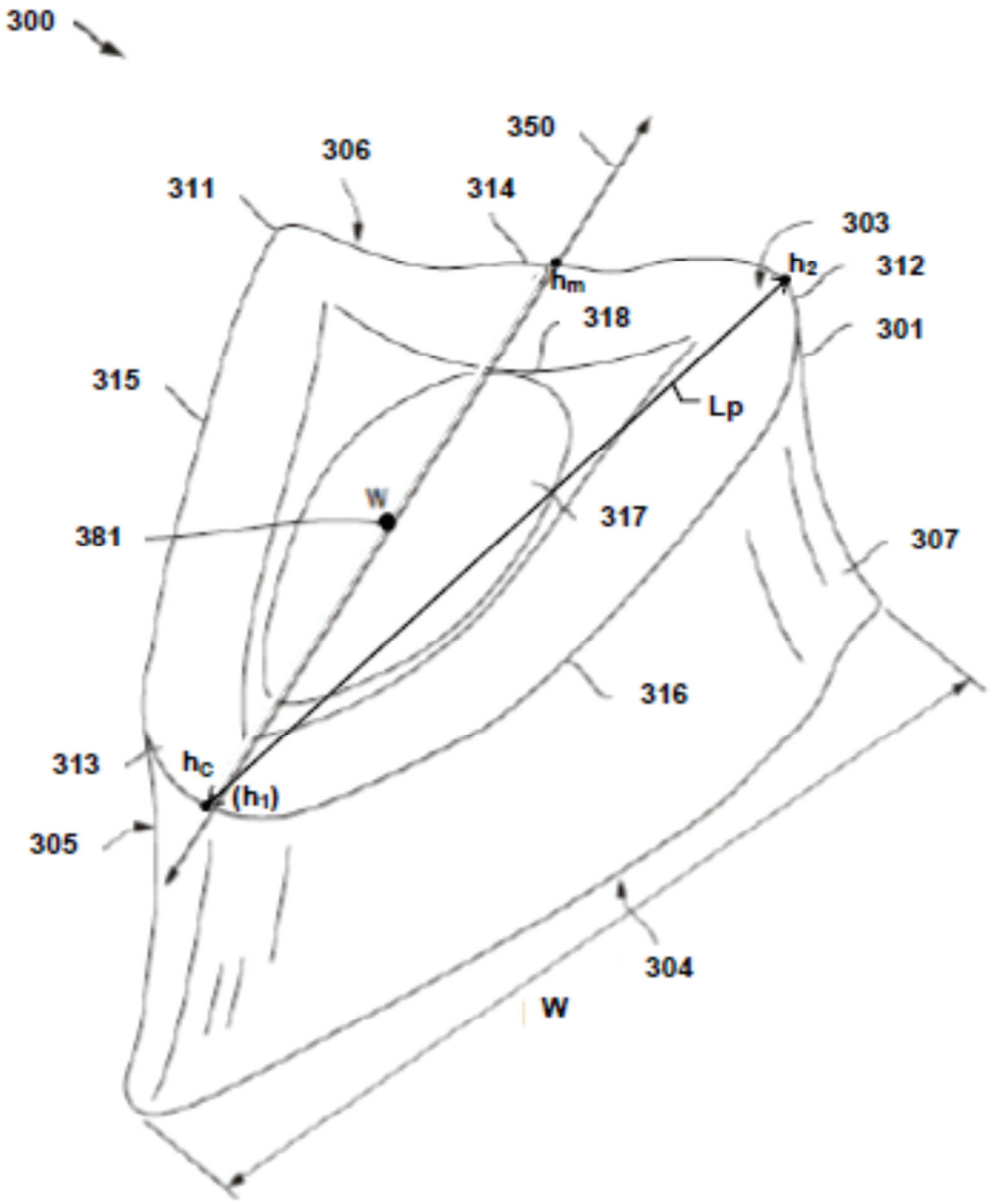
300
350
306
311
314
303
h_2
312
h_m
318
301
315
Lp
W
317
381
307
316
313
h_C
(h_1)
305
304
W

FIG. 3A

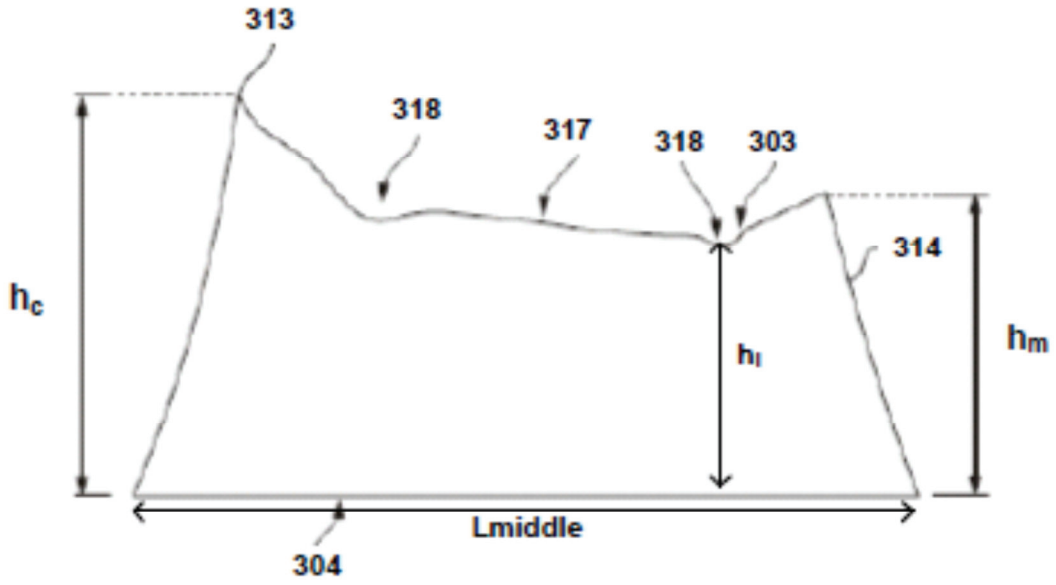
313
318
317
318
303
314
h_c
h_l
h_m
Lmiddle
304

FIG. 3B

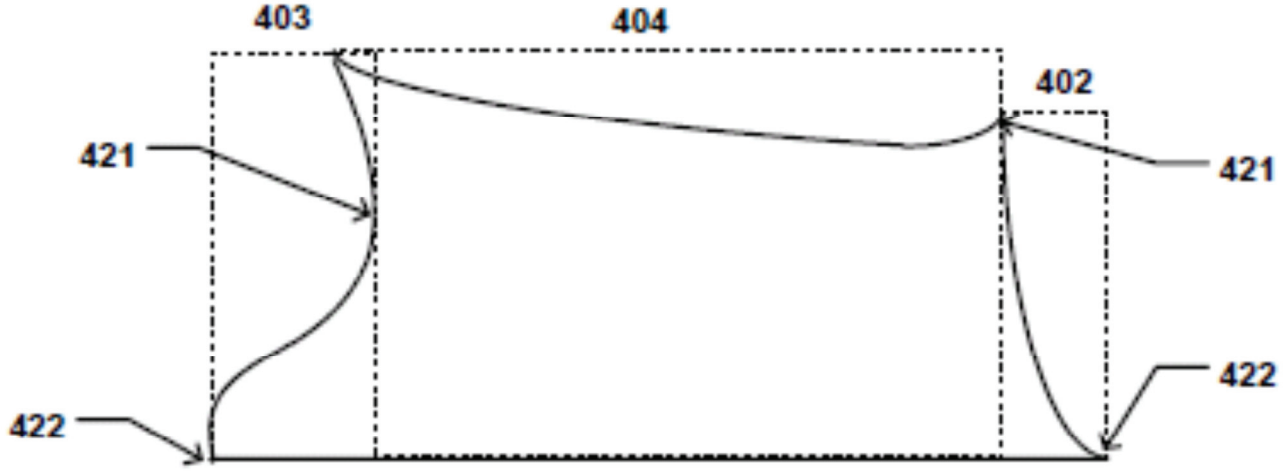
403
404
402
421
421
422
422

FIG. 4